CORRESPONDENCE TABLE FOR PETROL ENGINES									
Engine families	TU		ET	TU		DV			
	1	3		5		4			6
	JP		J4	JP4	JP4S	TD		TED4	ATED4
	1.1i	1.4i	1.4i 16V	1.6i 16V		1.4 HDi		1.4 16V HDi	1.6 16V HDi
Engine types	HFX	KFV	KFU	NFU	NFS	8HX	8HZ	8HY	9HX
C2	X	X		X	X	X	X		
C3	X	X	X	X		X	X	X	X
C3 PLURIEL		X		X		X	X		

VERY IMPORTANT

As the booklet is constantly re-edited, this one only covers vehicles for this particular model year.

It is therefore necessary to order a new booklet each year and RETAIN THE OLD ONES.

CITROËN

AC/QCAV/MTD
Méthodes techniques documentation

PRIVATE CARS

2005

PRIVATE CARS
C2-C3-C3 PLURIEL

«The technical information contained in this document is intended for the exclusive use of the trained personnel of the motor vehicle repair trade. In some instances, this information could concern the security and safety of the vehicle. The information is to be used by the professional vehicle repairers for whom it is intended and they alone would assume full responsibility to the exclusion of that of the manufacturer».
«The technical information appearing in this brochure is subject to updating as the characteristics of each model in the range evolve. Motor vehicle repairers are invited to contact the CITROËN network periodically for further information and to obtain any possible updates».

2005

CAR 000 020
Volume 1

PRESENTATION

THIS HANDBOOK summarises the specifications, adjustments, checks and special features concerning **CITROËN** private vehicles, not including UTILITY vehicles for which there exists a separate handbook.

The handbook is divided into groups representing the main functions:

GENERAL - ENGINE - INJECTION - IGNITION - CLUTCH, GEARBOX, DRIVESHAFTS - AXLES SUSPENSION, STEERING - BRAKES - AIR CONDITIONING.

In each section, the vehicles are dealt with in the following order: C2-C3-C3 PLURIEL and all models where applicable.

The information given in this handbook is based on vehicles marketed in **EUROPE**.

IMPORTANT

If you find that this handbook does not always meet your requirements, **we invite you to send us your suggestions** which we will take into account when preparing future publications.
For example:

- INSUFFICIENT INFORMATION
- SUPERFLUOUS INFORMATION
- NEED FOR MORE DETAILS

Please send your comments and suggestions to:

CITROEN U.K. Ltd.
221, Bath Road,
SLOUGH,
SL1 4BA.
U.K.

CONTENTS

CONTENTS

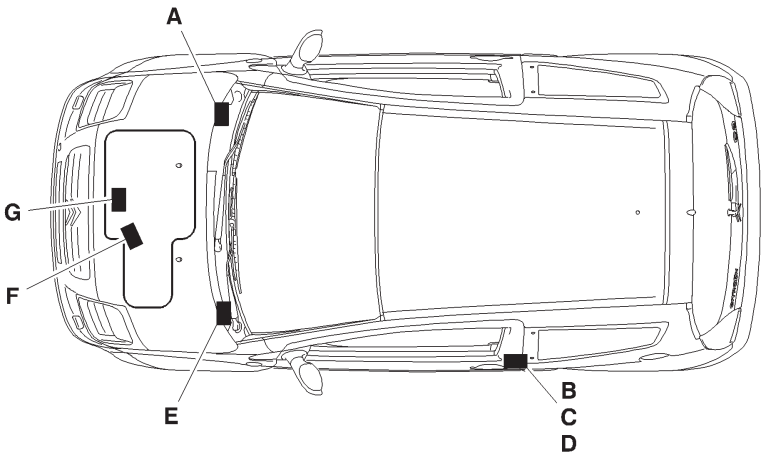

E1AP0C3D

A - Cold stamp
(cold stamp engraved on the bodywork).

B - Manufacturer's name plate
(on the LH centre pillar).

C - AS/RP No. and RP paint code
(on the LH centre pillar).

D - Tyre pressures and tyre type
(on the LH centre pillar).

E - Serial number on bodywork.

F - Gearbox ident. reference - Factory serial no.

G - Engine legislation type - Factory serial no.

IDENTIFICATION OF VEHICLES

Type approval

Structure		
JM HFXC/IF	J	Family **(1)**
	M	Bodywork **(2)**
	HFX	Engine **(3)**
	C	Version **(4)**
	/IF	Variant **(5)**

Family (1)	
J	C2

Bodywork (2)	
G	3-door saloon not convertible from van
M	3-door saloon (4 seater)

Engine (3)		
HFX	1.1i	TU1JP
KFV	1.4i	TU3JP
NFU	1.6i 16V	TU5JP4
NFS	1.6i 16V	TU5JP4S
8HX	1.4 HDi	DV4TD
8HZ	1.4 HDi	DV4TD

	Version (4)							
	Depollution levels							
	L3	L4	L5	US	Others	K	Alcohol	
	W3			83/87		K'	L3/L4	L5
Manual 5-speed gearbox	A	B	C	P	V	5	8	1
Manual 4-speed gearbox		E	F	R	W	6	9	2
Manual 6-speed gearbox		G	H	S	X			3
Automatic 6-speed gearbox		D	J	N				U
Axle and/or gearbox gears		K	L	T	Y	7	0	4
Other possible combinations		M						
No gearbox	Z							

Variants (5)		
Entreprise convertible	T	
Integral alternator-starter (ADIN)	AD	
Without FAP	SF	
Fiscal incentives	IF	
Piloted manual gearbox	P	
Downgraded depollution	D (car or van not convertible from van)	TD (convertible from van)
LPG dual fuel	GPL (cylindrical tank)	GL (ring-shaped tank)
STT2 (stop and start)	S	

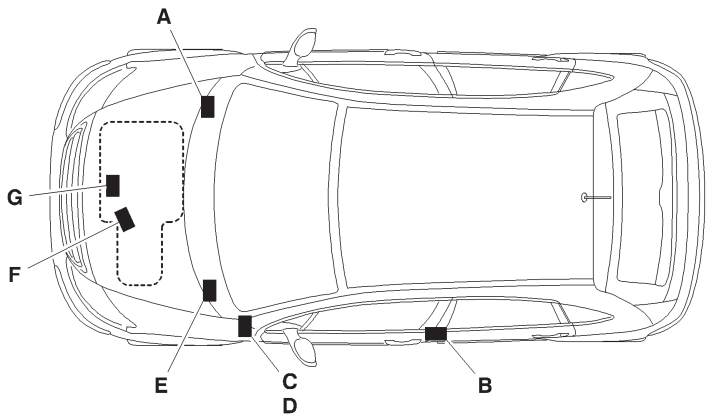

E1AP09HD

A - Cold stamp
(cold stamp engraved on the bodywork).

B - Manufacturer's name plate
(on the LH centre pillar).

C - AS/RP No. and RP paint code
(on the front pillar on driver's side).

D - Tyre pressures and tyre type
(on the front pillar on driver's side).

E - Serial number on bodywork.

F - Gearbox ident. reference - Factory serial no.

G - Engine legislation type - Factory serial no.

IDENTIFICATION OF VEHICLES

Type approval

Structure		
FC HFXC/IF	F	Family **(1)**
	C	Bodywork **(2)**
	HFX	Engine **(3)**
	C	Version **(4)**
	/IF	Variant **(5)**

Family (1)	
F	C3

Bodywork (2)	
C	5-door saloon (5-seater)
L	Sport or leisure (if different from base C)
R	5-door saloon not convertible from van
T	5-door saloon (if different from base N)

	Version (4)							
	Depollution levels							
	L3	L4	L5	US	Others	K	Alcohol	
	W3			83/87		K'	L3/L4	L5
Manual 5-speed gearbox	A	B	C	P	V	5	8	1
Manual 4-speed gearbox	D	E	F	R	W	6	9	2
Manual 6-speed gearbox		G	H	S	X			3
Axle and/or gearbox gears	J	K	L	T	Y	7	0	4
Other possible combinations		M	N	U				
No gearbox	Z							

IDENTIFICATION OF VEHICLES

Type approval (continued)

Engine (3)			Variants (5)		
HFX	1.1i	TU1JP-TU1A	Entreprise convertible	T	
KFV	1.4i	TU3JP-TU3A	Integral alternator-starter (ADIN)	AD	
KFU	1.4i 16V	ET3JA	Without FAP	SF	
NFU	1.6i 16V	TU5JP4	Fiscal incentives	IF	
N6A	1.6i 16V	TU5JP4 TR	Piloted manual gearbox	P	
8HX	1.4 HDi	DV4TD	Downgraded depollution	D (car or van not convertible)	TD (van convertible)
8HZ	1.4 HDi	DV4TD	LPG dual fuel	GPL (cylindrical tank)	GL (ring-shaped tank)
8HY	1.4 16V HDi	DV4TED4	STT2 (stop and start)	S	
9HZ	1.6 16V HDi	DV6ATED4 FAP	Flex Fuel	FF	

IDENTIFICATION OF VEHICLES

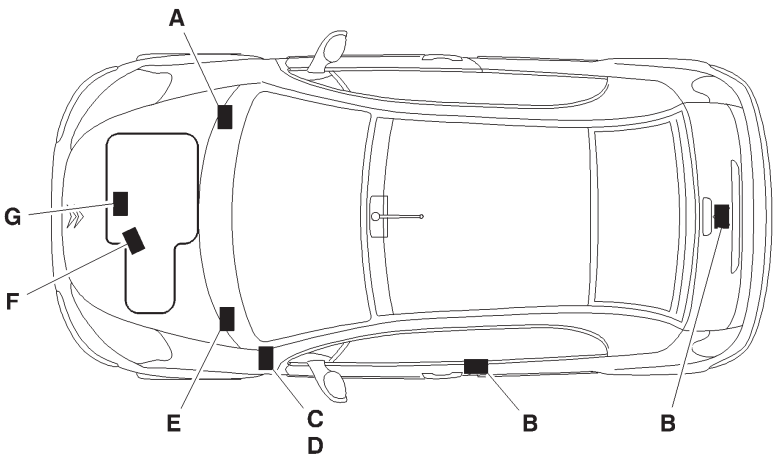

E1AP0B2D

A - Cold stamp
(cold stamp engraved on the bodywork).

B - Manufacturer's name plate
(on the LH centre pillar).

C - AS/RP No. and RP paint code
(on the front pillar on driver's side).

D - Tyre pressures and tyre type
(on the front pillar on driver's side).

E - Serial number on bodywork.

F - Gearbox ident. reference - Factory serial no.

G - Engine legislation type - Factory serial no.

IDENTIFICATION OF VEHICLES

Type approval

Structure		
HN KFVC/IF	H	Family **(1)**
	N	Bodywork **(2)**
	KFV	Engine **(3)**
	C	Version **(4)**
	/IF	Variant **(5)**

Family (1)	
H	C3 Pluriel

Bodywork (2)	
B	Cabriolet

Engine (3)		
KFV	1.4i	TU3JP
NFU	1.6i 16V	TU5JP4
8HX	1.4 HDi	DV4TD
8HZ	1.4 HDi	DV4TD

Version (4)	Depollution levels							
	L3	L4	L5	US	Others	K	Alcohol	
	W3			83/87		K'	L3/L4	L5
Manual 5-speed gearbox	A	B	C	P	V	5	8	1
Manual 4-speed gearbox		E	F	R	W	6	9	2
Manual 6-speed gearbox		G	H	S	X			3
Automatic 6-speed gearbox		D	J	N				U
Axle and/or gearbox gears		K	L	T	Y	7	0	4
Other possible combinations		M						
No gearbox	Z							

Variants (5)		
Entreprise convertible	T	
Integral alternator-starter (ADIN)	AD	
Without FAP	SF	
Fiscal incentives	IF	
Piloted manual gearbox	P	
Downgraded depollution	D (Car or van not convertible from)	TD (van convertible)
LPG dual fuel	GPL (cylindrical tank)	GL (ring-shaped tank)
STT2 (stop and start)	S	

C2 - C3	OPERATIONS TO BE CARRIED OUT AFTER A REPAIR

IMPERATIVE: All these operations are to be performed following a reconnection of the battery.

Antiscanning function.
It is necessary to wait **1 minute** after the battery has been disconnected in order to be able to start the vehicle.

Tailgate.
The opening of the tailgate is deactivated on reconnection of the battery.
Perform locking/unlocking to activate the opening of the tailgate.

Overspeed check.
The vehicle's overspeed values have to be re-initialised.
The button on the wiper stalk *(multifunction display **B** or **C**)* or the button on the dashboard *(multifunction display **A** or clock)* operates the following functions:
- Activation of the vehicle's overspeed function.
- Programming of the overspeed alert.

Electric windows.
It may be necessary to re-initialise the sequential and anti-pinch functions.
NOTE: If the window is open at the time the battery is reconnected, action the window switch several times to close it, then re-initialise.
Open the window fully.
Action and release the window switch until the window is completely closed.
This operation has to be carried out on each electric window.

Sun roof.
The anti-pinch function has to be re-initialised.
Place the sun roof switch in the maximum tilt position.
Keep the sun roof switch pressed until the sun roof ceases its movement.
Release the sun roof switch within **5 seconds**.
Keep the sun roof switch pressed until the end of the sun roof opening sequence.

Multifunction screen.
It is necessary to adjust the date, time and outside temperature.
Adjust the display language of the multifunction screen if necessary.
NOTE: The default display language of the multifunction screen is French.

Navigation.
Warning, the vehicle has to be in the open air *(on switching on the ignition, the ECU searches for satellites)*.
Vehicle location is only effective after some ten minutes.
Reprogramme the customer parameters.

Radio.
Reprogramme the radio stations.

Radiotelephone RT3.
Reprogramme the radio stations.

CAPACITIES (in litres)

Draining methods

Oil capacities are defined according to the following methods

Draining of the engine lubrication system by **GRAVITY**	Draining of the engine lubrication system by **SUCTION**
Place the vehicle on horizontal ground *(in the high position if hydropneumatic suspension)*. The engine should be hot *(oil temperature **80°C**)*. Drain the sump by gravity. Remove the oil filter cartridge *(time for draining and drip-drip = **15 minutes** approx.)*. Refit the cap with a new seal. Refit a new oil filter cartridge. Refill the engine with oil *(see table for oil capacity)*. Start the engine to fill the oil filter cartridge. Stop the engine *(allow to stabilise for **5 minutes**)*.	Place the vehicle on horizontal ground *(in the high position if hydropneumatic suspension)*. The engine should be hot *(oil temperature **80°C**)*. Remove the oil by suction through the dipstick tube. Remove the oil filter cartridge. Maintain the suction of oil in the sump *(**15 minutes** approx.)*. Refit a new oil filter cartridge. Refill the engine with oil *(see table for oil capacity)*. Start the engine to fill the oil filter cartridge. Stop the engine *(allow to stabilise for **5 minutes**)*. **WARNING:** Remove the suction container before starting the engine

ESSENTIAL: Systematically check the oil level using the oil dipstick.

CAPACITIES (in litres)								C2
	C2							
	Petrol				Diesel			
	TU1JP	TU3JP	TU5JP4	TU5JP4S	DV4TD			
					→ RPO 9884	RPO 9885 →	RPO →	
	1.1i	1.4i	1.6i 16V		1.4 HDi			
Engine type	HFX	KFV	NFU	NFS	8HX		8HZ	
Engine with filter change	3		3,25		3,75			
Between min. and max.	1,5		1,5		1,8	1,5		
MA5 5-speed gearbox	2							
MA5 piloted 5-speed gearbox	2 ± 0,15							
Braking circuit	**0,7 Litre** version with front calipers **Ø 48 / rear drums** **0,8 Litre** version with front calipers **Ø 54 / rear discs**							
Cooling system	7				5,6			
Fuel tank capacity	40				45			

ESSENTIAL: Systematically check the oil level using the oil dipstick.

GENERAL

C3	CAPACITIES (in litres)										
	C3										
	Petrol					Diesel					
	TU1JP	TU3JP		ET3J4	TU5JP4	DV4TD			DV4ATED4		DV6ATED4
	1.1i	1.4i		1.4i 16V	1.6i 16V	→ RPO 9884	RPO 9885 →	RPO →	→ RPO 9884	RPO 9885 →	1.6 16V HDi
			BVA			1.4 HDi			1.4 16V HDi		
Engine type	HFX	KFV		KFU	NFU	8HX		8HZ	8HY		9HZ
Engine with filter change	3			3,75	3,25	3,75					
Between min. and max.	1,5			1,2	1,5	1,8	1,5		1,8	1,5	
5-speed gearbox	2			2							
Automatic gearbox			(1)								
Braking circuit	**0, 7 litre** version with front calipers **Ø 48 / rear drums** **0,8 Litre** version with front calipers **Ø 54 / rear discs**										
Cooling system	7			6	7	5,7			5,6		
Fuel tank capacity	45										

ESSENTIAL: Systematically check the oil level using the oil dipstick.

(1) = The gearbox **is lubricated for life** *(for your information, the TOTAL capacity is **5,85 litres**, after draining: **3 litres**).*

CAPACITIES (in litres)				C3 PLURIEL
	C3 Pluriel			
	Petrol		Diesel	
	TU3JP	TU5JP4	DV4TD	
	1.4i	1.6i 16V		RPO →
			1.4 HDi	
Engine type	KFV	NFU	8HX	8HZ
Engine with filter change	3	3,25	3,75	
Between min. and max.	1,5			
5-speed gearbox	2			
Braking circuit	**0,7 Litre** version with front calipers **Ø 48 / rear drums** **0,8 Litre** version with front calipers **Ø 54 / rear discs**			
Cooling system	7		5,7	
Fuel tank capacity	45			

ESSENTIAL: Systematically check the oil level using the oil dipstick.

GENERAL

LUBRICANTS - TOTAL recommended oils

EVOLUTIONS (YEAR 2004).

CITROËN C4

Petrol engine versions except 2.0 i 16V 180 hp *(132 kW)*:
Normal maintenance interval: **30 000 km *(20 000 miles)*.**
Severe maintenance interval: **20 000 km *(12 000 miles)*.**

Petrol engine version 2.0L i 16V 180 hp *(132 kW)*:
Normal maintenance interval: **20 000 km *(12 500 miles)*.**
Severe maintenance interval: **15 000 km *(10 000 miles)*.**

Diesel engine versions:

WARNING: Vehicles HDi FAP (*) do not accept the energy economy oil TOTAL ACTIVA FUTUR 9000 5W30 for France, TOTAL QUARTZ FUTURE 9000 5W30 outside France .

DV6 engines:
Normal maintenance interval: **20 000 km *(12 500 miles)*.**
Severe maintenance interval: **15 000 km *(10 000 miles)*.**

DW engines:
Normal maintenance interval: **30 000 km *(20 000 miles)*.**
Severe maintenance interval: **20 000 km *(12 000 miles)*.**

New Look CITROËN C5

Petrol engine versions:
Normal maintenance interval: **30 000 km *(20 000 miles)*.**
Severe maintenance interval: **20 000 km *(12 000 miles)*.**

Diesel engine versions:

WARNING: Vehicles HDi FAP (*) do not accept the energy economy oil TOTAL ACTIVA FUTUR 9000 5W30 for France, TOTAL QUARTZ FUTURE 9000 5W30 outside France.

DV6 engines:
Normal maintenance interval: **20 000 km *(12 500 miles)*.**
Severe maintenance interval: **15 000 km *(10 000 miles)*.**

DW engines:
Normal maintenance interval: **30 000 km *(20 000 miles)*.**
Severe maintenance interval: **20 000 km *(12 000 miles)*.**

ESSENTIAL: For all vehicles with a 30 000 km (20 000 miles) maintenance interval, use exclusively TOTAL ACTIVA/QUARTZ 7000 or 9000 or any other oils offering identical specifications to these.

These oils offer specifications that are superior to those defined by norms **ACEA A3 OR API SJ/CF.**

Failing this, it is essential to adhere to the maintenance programmes covering severe operating conditions.

LUBRICANTS - TOTAL recommended oils

Use of oil grade 10W40.
It is possible to use the semi-synthetic oil **7000 10W40** on HDi and HDi FAP vehicles.

WARNING: To avoid difficulties when starting from cold (< 20°C), use 5W40 oil.
For more details, see the oil usage table *(paragraph 3.3)*.
Commercial description for energy economy oil.
TOTAL ACTIVA FUTUR 9000 5W30 *(France only)*.
TOTAL QUARTZ FUTUR 9000 5W30 *(except France)*.
The exclusions for use of this oil are the following:
- XSARA VTS 2.0 16V (XU10J4RS)
- JUMPER/RELAY 2.8 HDi and 2.8 TDi (SOFIM engine)
- HDi FAP vehicles
- CITROËN C3 HDi 16V (DV4TED4)
- CITROËN C8 2.2i (EW12J4)
- CITROËN C4 and C5 2.0i (EW10A)
- CITROËN C4 (EW10J4S)

Engine oil norms.
Current norms.
The classification of these engine oils is established by the following recognised organisations:
- S.A.E : Society of Automotive Engineers.
- API : American Petroleum Institute.
- ACEA : Association des Constructeurs Européens d'Automobiles

S.A.E. Norms - Table for selection of engine oil grade.
Selection of engine oil grades recommended for climatic conditions in countries of distribution *(see table, paragraph 3.3)*.

Evolution of the norms to 01/01/2003.

ACEA 2003 norms.
The meaning of the first letter has not changed, it still corresponds to the type of engine:
A: petrol and **dual fuel petrol** / **LPG** engines.
B: diesel engines.
The figure following the first letter corresponds to the type of oil.
3: high performance oils.
4: oils specifically for direct injection diesel engines.
5: very high performance oils permitting lower fuel consumption, specific to direct injection diesel engines.

Example:
ACEA A3: high performance oils specifically for petrol and dual fuel petrol / LPG engines.
ACEA A/B: blended oils giving very high performance for all engines, also permitting better fuel economy, specifically for direct injection diesel engines.

NOTE: From **01/01/2003** there is no longer any reference to the year of creation of the norm *(example: **ACEA A3/B3 98** becomes **ACEA A3/B3**)*.

LUBRICANTS - TOTAL recommended oils

API NORMS:
The meaning of the first letter has not changed, it still corresponds to the type of engine:
S: petrol and **dual fuel petrol** / **LPG** engines.
C: diesel engines.
The second letter corresponds to the degree of evolution of the oil *(ascending order)*.
Example: Norm **SL** is more severe than norm **SJ**, corresponding to a higher level of performance.
Recommendations.
ESSENTIAL: To preserve engine performances, all engines fitted in CITROËN vehicles must be lubricated with high quality oils *(synthetic or semi-synthetic)*.
CITROËN engines are lubricated at the factory with **TOTAL** oil of grade **S.A.E 5W-30**.
TOTAL oil of grade **S.A.E 5W-30** allows improved fuel economies *(approx **2.5%**)*.
The oil **5W30** is used only for the following engines *(year 2004)*:
- **XU10 J4RS** : XSARA VTS 2.0i 16V (3-door)
- **SOFIM** : JUMPER / RELAY 2.8 TDi and 2.8 HDi.
- **HDi** : With particle filter (FAP).
- **DV4 TED4** : CITROËN C3 1.4 16V HDi.
- **EW 12J4** : CITROËN C8 2.2i.
- **EW 10A** : CITROËN C4 and C5 2.0i.
- **EW10J4S engine** : CITROËN C4

WARNING: CITROËN engines prior to model year 2000 do not have to be lubricated with oils adhering to the norms:
- ACEA AI-98 and **API SJ/CF EC** or current norms **ACEA A5/B5**.

Denomination of **TOTAL** oils according to country of marketing:
- **TOTAL ACTIVA** *(France only)*.
- **TOTAL QUARTZ** *(outside France)*.

Summary.
Norms to be respected for engine oils *(year 2004)*.

Year	Petrol engines concerned	ACEA Norms	API Norms
2003	Petrol and LPG dual fuel engines	A3 or A5 (*)	SJ or SL
	Diesel engines	B3, B4 or B5 (*)	CF

(*) It is essential not to use engine oils respecting these norms for **XU10J4RS**, **SOFIM 2.8 TDi** and **SOFIM 2.8 HDi** engines, HDi engines with particle filter **EW10A**, **EW12J4**, **DV4TED4**.

LUBRICANTS - TOTAL recommended oils

Classes and grades of TOTAL recommended engine oils

The oils distributed in each country are suited to the local climatic conditions.

Blended oils for all engines (petrol, diesel and dual fuel petrol/LPG):

	S.A.E. norms	ACEA norms	API norms
TOTAL ACTIVA 9000 TOTAL QUARTZ 9000	5W40	A3/B3/ B4	SL/CF
TOTAL ACTIVA FUTUR 9000 **(*)** TOTAL QUARTZ FUTUR 9000 **(*)**	5W30	A5/B5	
TOTAL ACTIVRAC	10W40	A3/B3	

(*) Blended oils for all engines giving fuel economy.

Oils for petrol, diesel and dual fuel petrol/LPG engines:

	S.A.E. norms	ACEA norms	API norms
TOTAL ACTIVA 7000 TOTAL QUARTZ 7000	10W40	A3	SL
TOTAL QUARTZ 9000	0W40		
TOTAL ACTIVA 7000 TOTAL QUARTZ 7000	15W50		

Oils specifically for diesel engines:

	S.A.E. norms	ACEA norms	API norms
TOTAL ACTIVA DIESEL 7000 TOTAL QUARTZ DIESEL 7000	10W40	B3	CF
TOTAL ACTIVA DIESEL 7000	15W50		

LUBRICANTS - TOTAL recommended oils

Oil usage table

Engine types		TOTAL ACTIVA QUARTZ				
		Synthetic 9000			Semi-synthetic 7000	
		0W40	5W30	5W40	10W40	15W50
				Hot countries		
			Temperate countries			
		Cold countries				
Petrol engines	EW10J4S (CITROËN C4)	X		X		
	EW12J4 (CITROËN C8 2.2i 16V)	X		X	X	X
	EW10A (CITROËN C4 and C5)	X		X	X	X
	Other petrol engines	X	X	X	X	X
Diesel engines	HDi engines with FAP (*)	X		X	X **(*)**	X
	Other HDi engines	X	X	X	X	X
	SOFIM 2.8 HDi and 2.8 TDi (RELAY)			X	X	X
	DV4 TED4 (C3 1.6 16V HDi)	X		X	X	X
	Indirect injection diesel engines		X	X	X	X

(*) Do not use this oil in cold climatic conditions *(temperature less than **- 20°C**)*.
See the table below for the choice of **TOTAL** engine oil grades to be used according to the climatic conditions in the country of marketing.

LUBRICANTS - TOTAL recommended oils

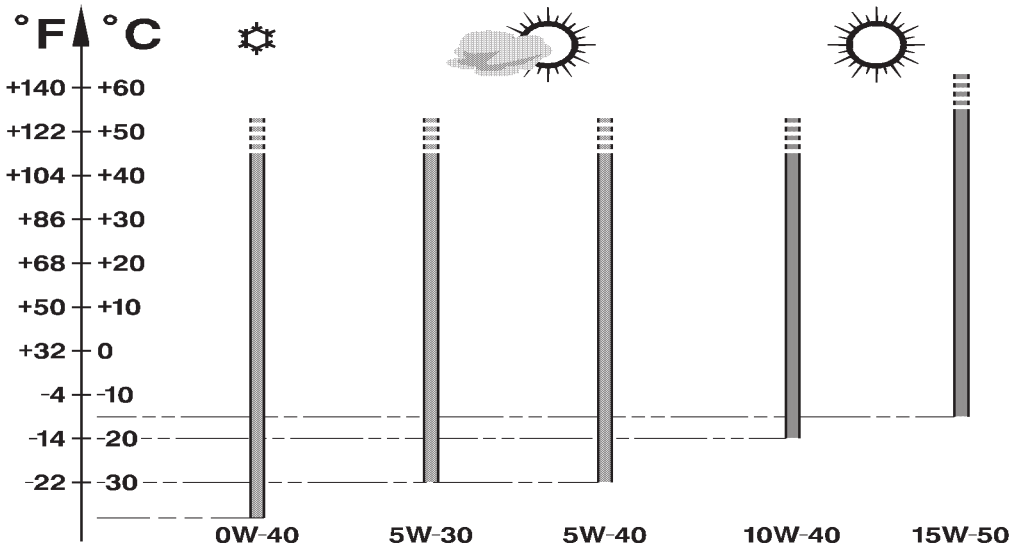

E4AP006D

GENERAL

LUBRICANTS - TOTAL recommended oils

FRANCE	ENGINE OILS	
	Blended oils for all engines, supplied in bulk	
Metropolitan FRANCE	TOTAL ACTIVRAC	Norms S.A.E: 10W40

	TOTAL ACTIVA		TOTAL ACTIVA DIESEL
	Blended oils for all engines	Oils specifically for petrol and dual-fuel petrol / LPG engines	Oils specifically for diesel engines
Metropolitan FRANCE	9000 5W40 FUTUR 9000 5W30 (*)	7000 10W40	7000 10W40 9000 5W40
New Caledonia Guadeloupe Saint martin Reunion Martinique Guyana Tahiti Mauritius Mayotte	9000 5W40	7000 15W50 7000 10W40	7000 15W50 7000 10W50

(*) = Blended oils for all engines, giving fuel economy.

LUBRICANTS - TOTAL recommended oils

EUROPE	ENGINE OILS		
	TOTAL QUARTZ		TOTAL QUARTZ DIESEL
	Blended oils for all engines	Oils specifically for petrol and dual-fuel petrol / LPG engines	Oils specifically for diesel engines
Germany	9000 5W40 FUTUR 9000 5W30 (*)	7000 10W40 9000 0W40	7000 10W40
Austria		7000 10W40	
Belgium		7000 10W40 9000 0W40	
Bosnia		7000 10W40 9000 0W40	
Bulgaria		7000 10W40	
Cyprus		7000 10W40 9000 15W40	
Croatia		7000 10W40	

(*) = Blended oils for all engines, giving fuel economy.

LUBRICANTS - TOTAL recommended oils

EUROPE	ENGINE OILS		
	TOTAL QUARTZ		TOTAL QUARTZ DIESEL
	Blended oils for all engines	Oils specifically for petrol and dual-fuel petrol / LPG engines	Oils specifically for diesel engines
Denmark	9000 5W40 FUTUR1 9000 5W30 (*)	7000 10W40 9000 0W40	7000 10W40
Spain		7000 10W40 7000 15W40	
Estonia		7000 10W40 9000 0W40	
Finland			
Great Britain		7000 10W40	
Greece		7000 10W40 7000 15W40	
Holland		7000 10W40 9000 0W40	

(*) = Blended oils for all engines, giving fuel economy.

LUBRICANTS - TOTAL recommended oils

EUROPE	ENGINE OILS		
	TOTAL QUARTZ		TOTAL QUARTZ DIESEL
	Blended oils for all engines	Oils specifically for petrol and dual-fuel petrol / LPG engines	Oils specifically for diesel engines
Hungary	9000 5W40 FUTUR 9000 5W30 (*)	7000 10W40 9000 0W40	7000 10W40
Italy		7000 10W40	
Ireland			
Iceland			
Latvia		7000 10W40 9000 0W40	
Lithuania			
Macedonia		7000 10W40	

(*) = Blended oils for all engines, giving fuel economy.

LUBRICANTS - TOTAL recommended oils			
EUROPE	ENGINE OILS		
	TOTAL QUARTZ		TOTAL QUARTZ DIESEL
	Blended oils for all engines	Oils specifically for petrol and dual-fuel petrol / LPG engines	Oils specifically for diesel engines
Malta	9000 5W40 FUTUR 9000 5W30 (*)	7000 10W40 7000 15W50	7000 10W40
Moldavia		7000 10W40	
Norway		7000 10W40 9000 0W40	
Poland		7000 10W40	
Portugal			
Slovakia			
Czech Republic		7000 10W40 9000 0W40	

(*) = Blended oils for all engines, giving fuel economy.

LUBRICANTS - TOTAL recommended oils

EUROPE	ENGINE OILS		
	TOTAL QUARTZ		TOTAL QUARTZ DIESEL
	Blended oils for all engines	Oils specifically for petrol and dual-fuel petrol / LPG engines	Oils specifically for diesel engines
Romania	9000 5W40 FUTUR 9000 5W30 (*)	7000 10W40 7000 15W50 9000 0W40	7000 10W40
Russia		7000 10W40 9000 0W40	
Slovenia			
Sweden			
Switzerland		7000 10W40	
Turkey		7000 10W40 9000 15W50 9000 0W40	

(*) = Blended oils for all engines, giving fuel economy.

LUBRICANTS - TOTAL recommended oils

EUROPE	ENGINE OILS		
	TOTAL QUARTZ		TOTAL QUARTZ DIESEL
	Blended oils for all engines	Oils specifically for petrol and dual-fuel petrol / LPG engines	Oils specifically for diesel engines
Ukraine	9000 5W40 FUTUR 9000 5W30 (*)	7000 10W40 9000 0W40	7000 10W40
Serbia-Montenegro			

(*) = Blended oils for all engines, giving fuel economy.

LUBRICANTS - TOTAL recommended oils

OCEANIA	ENGINE OILS		
	TOTAL QUARTZ		TOTAL QUARTZ DIESEL
	Blended oils for all engines	Oils specifically for petrol and dual-fuel petrol / LPG engines	Oils specifically for diesel engines
Australia New Zealand	9000 5W40 FUTUR 9000 5W30 (*)	7000 10W40	7000 10W40

AFRICA	TOTAL QUARTZ		TOTAL QUARTZ DIESEL
	Blended oils for all engines	Oils specifically for petrol and dual-fuel petrol / LPG engines	Oils specifically for diesel engines
Algeria, South Africa, Ivory Coast, Egypt, Gabon, Ghana, Kenya, Madagascar, Morocco, Nigeria, Senegal, Tunisia	9000 5W40	7000 10W40 7000 15W50	7000 10W40

(*) = Blended oils for all engines, giving fuel economy.

LUBRICANTS - TOTAL recommended oils

CENTRAL AND SOUTH AMERICA	ENGINE OILS		
	TOTAL QUARTZ		TOTAL QUARTZ DIESEL
	Blended oils for all engines	Oils specifically for petrol and dual-fuel petrol / LPG engines	Oils specifically for diesel engines
Argentina	9000 5W40	7000 10W40 7000 15W50	7000 10W40
Brazil			
Chile			
Cuba			
Mexico			
Paraguay			
Uruguay			

LUBRICANTS - TOTAL recommended oils

SOUTH-EAST ASIA	ENGINE OILS		
	TOTAL QUARTZ		TOTAL QUARTZ DIESEL
	Blended oils for all engines	Oils specifically for petrol and dual-fuel petrol / LPG engines	Oils specifically for diesel engines
China	9000 5W40 FUTUR 9000 5W30 (*)	7000 10W50 7000 15W50	7000 10W40
South Korea		7000 10W40	
Hong Kong		7000 15W50	
India - Indonesia	9000 5W40		
Japan	9000 5W40 FUTUR 9000 5W30 (*)	7000 10W40 7000 15W50	
Malaysia	9000 5W40	7000 15W50	
Pakistan			

(*) = Blended oils for all engines, giving fuel economy.

LUBRICANTS - TOTAL recommended oils

SOUTH-EAST ASIA	ENGINE OILS		
	TOTAL QUARTZ		TOTAL QUARTZ DIESEL
	Blended oils for all engines	Oils specifically for petrol and dual-fuel petrol / LPG engines	Oils specifically for diesel engines
Philippines	9000 5W40	7000 15W50	7000 10W40
Singapore			
Taiwan		7000 10W40 7000 15W50	
Thailand		7000 15W50	
Vietnam			

LUBRICANTS - TOTAL recommended oils

MIDDLE EAST	ENGINE OILS		
	TOTAL QUARTZ		TOTAL QUARTZ DIESEL
	Blended oils for all engines	Oils specifically for petrol and dual-fuel petrol / LPG engines	Oils specifically for diesel engines
Saudi Arabia - Bahrain Dubai United Arab Emirates	9000 5W40	7000 15W50	7000 10W40
Iran		7000 10W40 7000 15W50	
Israel - Jordan - Kuwait - Lebanon - Oman - Qatar - Syria - Yemen		7000 15W50	

LUBRICANTS - TOTAL recommended oils

GEARBOX OILS

Manual and piloted manual gearboxes	All countries	TOTAL TRANSMISSION BV Norms S.A.E: 75W80 **Part No.: 9730 A2.**
MB3 automatic gearbox		TOTAL FLUIDE ATX TOTAL FLUIDE AT 42 Special oil distributed by CITROËN **Part No.: 9730 A6**
4HP20 and AL4 autoactive automatic gearboxes		Special oil distributed by CITROËN **Part No.: 9736 22**
AM6 autoactive automatic gearbox		Special oil distributed by CITROËN **Part No.: 9980 D4**
Transfer box and rear axle		TOTAL TRANSMISSION X4 **Part No.: 9730 A7**

LUBRICANTS - TOTAL recommended oils

POWER STEERING OILS

Power steering all vehicles (except CITROËN C4 and C5)	All countries	TOTAL FLUIDE ATX
Power steering C4 and C5		TOTAL FLUIDE LDS Special oil distributed by CITROËN **Part No.: 9979 A3**
Power steering	Very cold countries	TOTAL FLUIDE DA Special oil distributed by CITROËN **Part No.: 9730 A1**

ENGINE COOLANT FLUID

		Packs	**CITROËN Part No.**	
			GLYSANTIN G33	**REVKOGEL 2000**
All countries	CITROËN fluid Protection: -35C°	**2** Litres	**9979 70**	**9979 72**
		5 Litres	**9979 71**	**9979 73**
		20 Litres	**9979 76**	**9979 74**
		210 Litres	**9979 77**	**9979 75**

LUBRICANTS - TOTAL recommended oils

BRAKE FLUID
Synthetic brake fluid

		Packs	CITROËN Part No.
All countries	CITROËN fluid	**0,5** Litre	**9979 05**
		1 Litre	**9979 06**
		5 Litres	**9979 07**

HYDRAULIC SYSTEM

All countries	Norm		Packs	CITROËN Part No.
TOTAL FLUIDE LDS	Colour	**Orange**	**1** Litre	**9979 A3**
TOTAL LHM PLUS		**Green**		**9979 A1**
TOTAL LHM PLUS Very cold countries				**9979 A2**

WARNING: TOTAL FLUIDE LDS fluid cannot be blended with **TOTAL LHM PLUS**

WARNING: CITROËN C5: Use exclusively TOTAL FLUIDE LDS suspension fluid.

All countries	**TOTAL HYDRAURINCAGE**

LUBRICANTS - TOTAL recommended oils

SCREEN WASH FLUID

	Packs		CITROËN Part No.		
All countries	Concentrated: **250** ml		**9980 33**	**ZC 9875 953U**	**9980 56**
	Fluid ready to use	**1** Litre	**9980 06**	**ZC 9875 784U**	
		5 Litres	**9980 05**	**ZC 9885 077U**	**ZC 9875 279U**

GREASING
General use

		Norms NLGI
All countries	**TOTAL MULTIS 2**	**2**
	TOTAL SMALL MECHANISMS	

NOTE: NLGI = National Lubrificating Grease Institude.

ENGINE OIL CONSUMPTION

I - Oil consumption depends on:
- The engine type.
- How run-in or worn it is.
- The type of oil used.
- The driving conditions.

II - An engine can be considered **RUN-IN** after:
- **3,000 miles (5,000 km)** for a **PETROL** engine.
- **6,000 miles (10,000 km)** for a **DIESEL** engine.

III - MAXIMUM PERMISSIBLE oil consumption for a RUN-IN engine:
- **0.5 litres per 600 miles (1,000 km)** for a **PETROL** engine.
- **1 litre per 600 miles (1,000 km)** for a **DIESEL** engine.

DO NOT INTERVENE BELOW THESE VALUES.

IV - OIL LEVEL: The level should **NEVER** be above the **MAX.** mark on the dipstick after changing or topping up the oil.
- This excess oil will be used up rapidly.
- It will reduce the engine output and adversely affect the operation of the air circuits and gas recycling.

ENGINE SPECIFICATIONS

	Petrol engines					
	All Types					
	1.1i	1.4i	1.4i 16V	1.6i 16V		
Engine type	**HFX**	**KFV**	**KFU**	**NFU**	**NFS**	
Cubic capacity (cc)	1124	1360		1587		
Bore / Stroke	72/69	75/77		78,5/82		
Compression ratio	10,5/1		11,1/1	11/1		
Power ISO or EEC (KW - rpm)	44,1-5500	54-5400	65-5250	80-5800	90-6500	
Torque ISO or EEC (m.daN - rpm)	9,4-3300	11,8-3300	13,3-3250	14,7-4000	14,3-3750	

ENGINE SPECIFICATIONS

	Diesel engines				
	All Types				
	1.4 HDi		1.4 16V HDi	1.6 16V HDi	
Engine type	**8HX**	**8HZ**	**8HY**	**9HX**	
Cubic capacity (cc)	1398			1560	
Bore / Stroke	73,7/82			75/88,3	
Compression ratio	17,9/1		18,4/1	18/1	
Power ISO or EEC (KW - rpm)	50-4000		66-4000	66,2-4000	
Torque ISO or EEC (m.daN - rpm)	15-1750	16-2000	20-1750	21,5-1750	

SPECIAL FEATURES - TIGHTENING TORQUES (m.daN)

C2

Engines: HFX - KFV - NFU - NFS

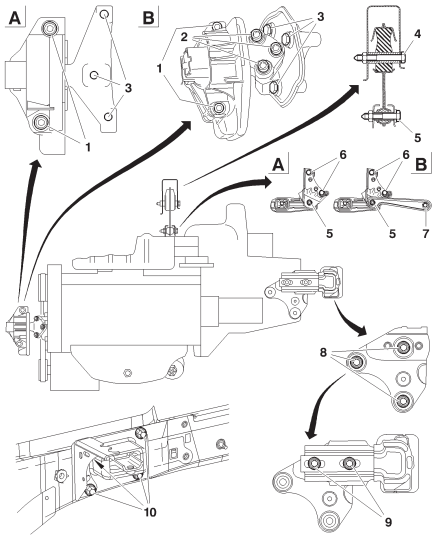

B1BP2Y3P

A = HFX - KFV
B = NFU - NFS

RH engine support

(1)	: 6 ± 0,4
(2)	: 6 ± 0,6
(3)	: 4,5 ± 0,4

Torque reaction rod

(4)	: 6 ± 0,6
(5)	: 6 ± 0,6
(6)	: 8,5 ± 0,2
(7)	: 6 ± 0,6

LH engine support on gearbox

(8)	: 3 ± 0,3
(9)	: 6 ± 0,6
(10)	: 5,5 ± 0,5

C2	SPECIAL FEATURES - TIGHTENING TORQUES (m.daN)
Engines	**HFX - KFV - NFU - NFS**
	Crankshaft
Accessories drive pulley	**2,5 ± 0,2**
Pinion fixing on crankshaft Tightening Angular tightening	 **4 ± 0,4** **45° ± 4°**
	Cylinder block
Sump	**0,8 ± 0,2**
Timing belt tensioner roller	**2,1 ± 0,2**
Accessories belt guide roller	**2,5 ± 0,2**
Alternator support	**2,5 ± 0,2**
Alternator TU1JP - TU3JP Pre-tightening Tightening	 **1 ±** **3,7 ± 0,3**
Alternatorr TU5JP4 Pre-tightening Tightening	 **1 ±** **4 ± ,04**
Aircon compressor support	**2,2 ± 0,2**
Aircon compressor	**2,3 ± 0,2**

SPECIAL FEATURES - TIGHTENING TORQUES (m.daN)	C2
Engines	**HFX - KFV - NFU - NFS**
	Cylinder head
Coolant outlet housing	
In plastic	**0,8 ± 0,2**
In aluminium	**0,8 ± 0,2**
Camshaft bearing caps (TU1JP - TU3JP)	
Tightening	**2 ± 0,2**
Angular tightening	**44 °± 4°**
Camshaft bearing caps (TU5JP4)	
Tightening	**2 ± 0,2**
Angular tightening	**50° ± 5°**
Inlet manifold	**0,8 ± 0,2**
Exhaust manifold	**1,8 ± 0,4**
Valve rockers adjusting screw	**1,75 ± 0,25**
Sparking plugs	**3**
Camshaft pulley screw (TU1JP - TU3JP)	**3,7 ± 0,2**
Camshaft pulley screw (TU5JP4)	**4,5 ± 0,5**

C2	SPECIAL FEATURES - TIGHTENING TORQUES (m.daN)
Engines	**HFX - KFV - NFU - NFS**
	Flywheel - clutch
Engine flywheel	**6,7 ± 1 (LOCTITE FRENETANCH)**
Oil pressure mechanism	**2 ± 0,2**
	Lubrication circuit
Oil pressure switch	**3,5 ± 0,5**
Oil pump	**0,9 ± 0,1**
	Cooling circuit
Coolant pump	**1,6 ± 0,2**

TIGHTENING TORQUES: POWER UNIT SUSPENSION

C2

Engines: 8HX - 8HZ

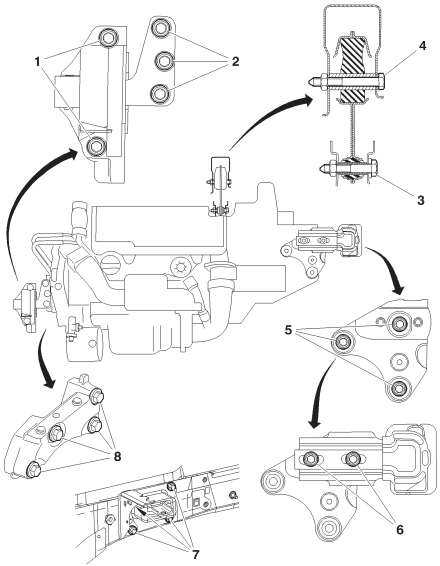

B1BP2Y1P

(1) : 6 ± 0,6

(2) : 6 ± 0,6

(3) : 6 ± 0,6

(4) : 6 ± 0,6

(5) : 3 ± 0,3

(6) : 6 ± 0,6

(7) : 5,5 ± 0,5

(8) : 5,7 ± 0,9

C2	SPECIAL FEATURES - TIGHTENING TORQUES (m.daN)
Engines	**8HX - 8HZ**
	Crankshaft
Bearing cap fixing screws	
Pre-tightening	**1 ± 0,2**
Slackening	**180°**
Tightening	**3 ± 0,3**
Angular tightening	**140°**
Con rod screws	
Tightening	**1 ± 0,1**
Angular tightening	**100° ± 5°**
Accessories drive pulley	
Pre-tightening	**3 ± 0,3**
Angular tightening	**180° ± 5°**
	Cylinder block
Sump	**1,3 ± 0,1**
Timing belt guide roller	**2,3 ± 0,2**
Timing belt tensioner roller	**3,7 ± 0,3**

SPECIAL FEATURES - TIGHTENING TORQUES (m.daN)	C2
Engines	**8HX - 8HZ**
	Cylinder head
Camshaft bearing covers	
Pre-tightening	**0,3 ± 0,1**
Tightening	**1 ± 0,1**
Fixing of camshaft sub-assemblies on cylinder head	
Pre-tightening	**0,3 ± 0,1**
Tightening	**1 ± 0,1**
Exhaust manifold	**3 ± 0,3**
Camshaft pulley	
Pre-tightening	**0,3 ± 0,1**
Tightening	**4,3 ± 0,4**
	Engine flywheel
Flywheel	
Pre-tightening	**1,7 ± 0,2**
Angular tightening	**70° ± 5°**
Clutch mechanism	**2 ± 0,2**

C2	SPECIAL FEATURES - TIGHTENING TORQUES (m.daN)
Engines	**8HX - 8HZ**
	Lubrication circuit
Oil pump assembly	
Pre-tightening	**0,5 ± 0,1**
Tightening	**0,9 ± 0,1**
Coolant/oil heat exchanger	**1 ± 0,1**
	Diesel injection circuit
Spherical-base screws for diesel injection fixing fork	**2,5 ± 0,2**
Fuel high pressure common injection rail on engine block	**2,2 ± 0,2**
Unions on fuel high pressure common injection rail	**2,5 ± 0,2**
Diesel injection pump on support	**2,2 ± 0,2**
Union on diesel injector	**2,5 ± 0,2**
Diesel injection pump pulley	**5 ± 0,5**
Union on diesel high pressure pump	**2,5 ± 0,2**
	Cooling circuit
Coolant pump	
Pre-tightening	**0,3 ± 0,1**
Tightening	**0,9 ± 0,1**
Coolant outlet housing	
Pre-tightening	**0,3 ± 0,1**
Tightening	**0,7 ± 0,1**

SPECIAL FEATURES - TIGHTENING TORQUES (m.daN)

C3 - C3 PLURIEL

Engines: HFX - KFV - NFU

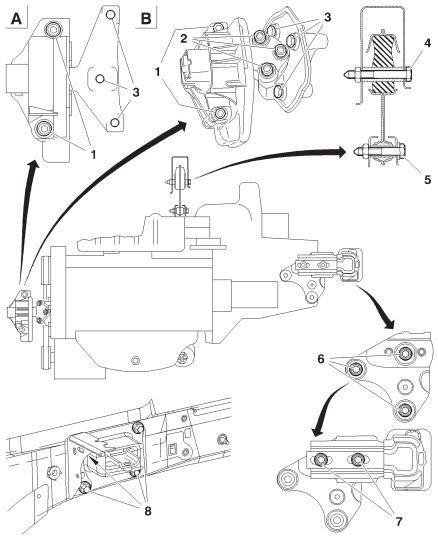

B1BP2NEP

C3

A = HFX - KFV
B = NFU

RH engine support
(1) : 4,5 ± 0,4
(2) : 6,1 ± 0,6
(3) : 4,5 ± 0,4

Torque reaction rod
(4) : 6 ± 0,6
(5) : 6 ± 0,6

LH engine support on gearbox
(6) : 3 ± 0,3
(7) : 6 ± 0,6
(8) : 5,5 ± 0,5

C3 Pluriel

A = KFV
B = NFU

RH engine support
(1) : 6 ± 0,4
(2) : 6 ± 0,6
(3) : 4,5 ± 0,4

Torque reaction rod
(4) : 6 ± 0,6
(5) : 6 ± 0,6

LH engine support on gearbox
(6) : 3 ± 0,3
(7) : 6 ± 0,6
(8) : 5,5 ± 0,5

C3	SPECIAL FEATURES - TIGHTENING TORQUES (m.daN)	
	Crankshaft	
Engines	**HFX**	**NFU**
Accessories drive pulley	**0,8 ± 0,2**	
Pinion fixing on crankshaft	**10 ± 1**	**2,5 ± 0,2**
	Cylinder block	
Sump	**0,8 ± 0,2**	
Timing belt tensioner roller	**2 ± 0,2**	**2,2 ± 0,2**
Accessories belt tensioner roller	**2 ± 0,2**	**2,5 ± 0,2**
Alternator support fixing	**1,7 ± 0,3**	
Alternator fixing on support	**3,7 ± 0,3**	
	Cylinder head	
Coolant outlet housing	**0,8 ± 0,2**	
Camshaft bearing cap		
Tightening	**2 ± 0,2**	**2 ± 0,2**
Angular tightening	**44° ± 4°**	**50° ± 5°**
Inlet manifold	**0,8 ± 0,2**	
Exhaust manifold	**1,7 ± 0,3**	**2 ± 0,2**
Valve rockers adjusting screw	**1,75 ± 0,25**	
Sparking plugs	**2,75 ± 0,25**	
Camshaft pulley screw	**8 ± 0,8**	

SPECIAL FEATURES - TIGHTENING TORQUES (m.daN)		C3
	Flywheel - Clutch	
Engines	**HFX**	**NFU**
Flywheel	**6,7 ± 0,6 + LOCTITE FRENETANCH**	
Clutch mechanism	**2 ± 0,2**	
	Lubrication circuit	
Oil pressure switch	**2 ± 0,2**	
Oil pump	**0,9 ± 0,1**	
	Cooling circuit	
Coolant pump	**1,4 ± 0,1**	
Coolant outlet housing	**0,8 ± 0,1**	

C3	TIGHTENING TORQUES: POWER UNIT SUSPENSION

Engine: KFU

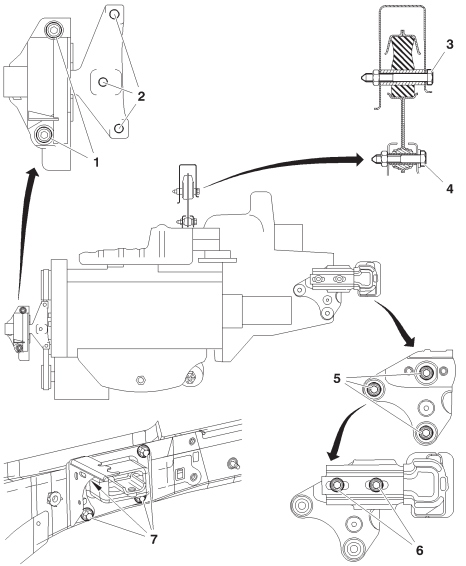

B1BP2ZBP

RH engine support

(1) : 6 ± 0,6
(2) : 6 ± 0,6

Torque reaction rod

(3) : 6 ± 0,6
(4) : 6 ± 0,6

LH engine support on gearbox

(5) : 3 ± 0,3
(6) : 6 ± 0,6
(7) : 5,5 ± 0,5

SPECIAL FEATURES - TIGHTENING TORQUES (m.daN)	C3
Engine	**KFU**
	Crankshaft
Accessories drive pulley	**0,8 ± 0,2**
Pinion fixing on crankshaft Pre-tightening Angular tightening	 **4 ± 0,4** **45 ± 4°**
	Cylinder block
Sump	**0,8 ± 0,2**
Accessories belt guide roller	**4 ± 0,4**
Timing belt tensioner roller	**2,1 ± 0,2**
Accessories belt tensioner roller	**2,5 ± 0,2**
Alternator support	**2,5 ± 0,3**
Crankshaft bearing caps Tightening Angular tightening	 **2 ± 0,3** **44° (re-used screws cleaned and greased)**
	Cylinder head
Coolant outlet housing	**0,8 ± 0,2**
Camshaft bearing caps	**1 ± 0,2**
Camshaft bearing cap covers	**0,9 ± 0,1**
Inlet manifold	**0,8 ± 0,2**

C3	SPECIAL FEATURES - TIGHTENING TORQUES (m.daN)
	Cylinder head (continued)
Exhaust manifold	**1,8 ± 0,2**
Sparking plugs	**2,2 ± 0,2**
VVT pulley cap	**4 ± 0,4**
VVT control electrovalve	**0,8 ± 0,2**
VVT inlet camshaft pulley screw	
Pre-tightening	**2 ± 0,2**
Tightening	**6,1 ± 0,6**
Exhaust camshaft pulley screw	**4,5 ± 0,4**
	Flywheel - clutch
Engine flywheel	**6,7 ± 0,6 (coat the screws with LOCTITE FRENETANCH)**
Clutch mechanism	**2 ± 0,2**
	Lubrication circuit
Oil pressure switch	**2 ± 0,2**
Oil pump	**0,9 ± 0,1**
	Cooling circuit
Coolant pump	**1 ± 0,1**
Coolant outlet housing	**0,8 ± 0,1**

SPECIAL FEATURES - TIGHTENING TORQUES (m.daN)

C3 - C3 PLURIEL

Engines: 8HX - 8HZ

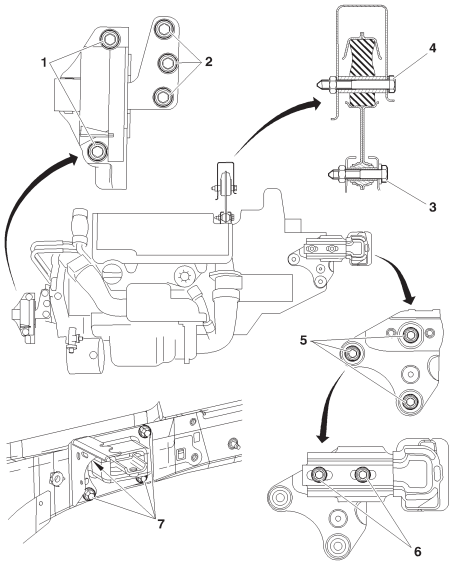

B1BP2LJP

RH engine support

(1) : 4,5 ± 0,4
(2) : 3 ± 0,3

Torque reaction rod

(3) : 6 ± 0,6
(4) : 6 ± 0,6

LH engine support on gearbox

(5) : 5,4 ± 0,5
(6) : 6 ± 0,6
(7) : 5,5 ± 0,5

SPECIAL FEATURES - TIGHTENING TORQUES (m.daN)		C3 - C3 PLURIEL
Engines	**8HX**	**8HZ**
	Crankshaft	
Bearing cap fixing screw		
Pre-tightening	**1**	
Slackening	**YES**	
Tightening	**3**	
Angular tightening	**140°**	
Con rod nuts		
Pre-tightening	**1**	
Slackening	**YES**	
Tightening	**1,5 ± 0,1**	
Angular tightening	**100° ± 5°**	
Accessories drive pulley		
Pre-tightening	**3 ± 0,4**	
Angular tightening	**180° ± 5°**	
	Cylinder block	
Sump	**1 ± 0,1**	
Timing belt guide roller	**4,5 ± 0,4**	**3,7 ± 0,4**
Timing belt tensioner roller	**3 ± 0,3**	**2,3 ± 0,3**

SPECIAL FEATURES - TIGHTENING TORQUES (m.daN)		C3 - C3 PLURIEL
Engines	**8HX**	**8HZ**
	Cylinder head	
Camshaft bearing covers Pre-tightening Tightening	 **0,5 ±** **1 ±**	
Fixing of camshaft sub-assemblies on cylinder head Pre-tightening Tightening	 **0,5** **1**	
Exhaust manifold	**2,5 ± 0,2**	
Valve cover	**2,5 ± 0,2**	
Camshaft pulley	**4,3 ± 0,4**	
	Flywheel	
Flywheel Pre-tightening Tightening	 **1,7** **70° ± 5°**	 **1,7** **75° ± 5°**
Clutch mechanism	**2 ± 0,2**	
	Lubrication circuit	
Oil pump assembly Pre-tightening Tightening	 **0,5 ± 0,06** **0,9 ± 0,1**	
Coolant/oil heat exchanger	**1 ± 0,1**	

C3 - C3 PLURIEL	SPECIAL FEATURES - TIGHTENING TORQUES (m.daN)
Engines	**8HX - 8HZ**
	Diesel injection circuit
Spherical-base screws for diesel injection fixing fork	**0,3 ± 0,1**
Fuel high pressure common injection rail on engine block	**2 ± 0,2**
Unions on fuel high pressure common injection rail	
Pre-tightening	**1,7 ± 0,2**
Tightening	**2,25 ± 0,2**
Diesel injection pump on support	**2,25 ± 0,2**
Union on diesel injecton	
Diesel injection pump pulley	**5 ± 0,5**
Union on diesel high pressure pump	**2,25 ± 0,2**
	Cooling circuit
Coolant pump	
Pre-tightening	**0,3 ± 0,06**
Tightening	**1 ± 0,1**
Coolant outlet housing	
Pre-tightening	**0,3 ± 0,06**
Tightening	**0,7 ± 0,08**

SPECIAL FEATURES - TIGHTENING TORQUES (m.daN)

C3

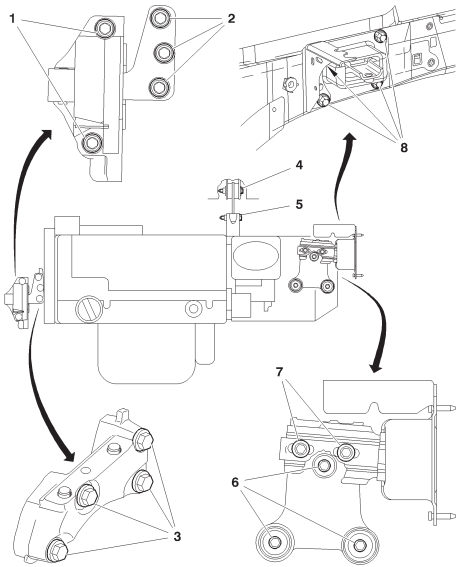

B1BP2MNP

Engine: 8HY

RH engine support

Screw (1)	: 6 ± 0,6
Screw (2)	: 6 ± 0,6

RH lower engine support

Screw (3)	: 5,7 ± 0,5

LH upper engine support

Screw (7)	: 6 ± 0,6
Screw (8)	: 5,5 ± 0,5

LH lower engine support

Screw (6)	: 5,4 ± 0,5

Torque reaction rod

Screw (4)	: 6 ± 0,6
Screw (5)	: 6 ± 0,6

C3	SPECIAL FEATURES - TIGHTENING TORQUES (m.daN)
Engine	**8HY**
	Crankshaft
Bearing cap fixing screw Tightening Angular tightening	 **3 ± 0,3** **140° ± 1°,4'**
Crankshaft pullet hub Tightening Angular tightening	 **3 ± 0,3** **180° ± 5°**
	Cylinder block
Oil sump	**1 ± 0,1**
Timing belt tensioner roller	**4 ± 0,4**
Timing belt guide roller	**2,5 ± 0,2**
Timing belt guide roller support	
	Cylinder head
Camshaft bearing cap cover	**1 ± 0,1**
Inlet manifold	
Exhaust manifold	**2,5 ± 0,2**
Cylinder head cover	**Screws (M6) to 1 ± 0,2**
Camshaft pinion	**4,3 ± 0,4**
Fuel high pressure pump pinion	**5 ± 0,5**

SPECIAL FEATURES - TIGHTENING TORQUES (m.daN)	C3
Engine	**8HY**
	Flywheel - Clutch
Flywheel	**1,7 ± 0,2**
Clutch mechanism	**2 ± 0,2**
	Lubrication Circuit
Oil pump assembly	**0,9 ± 0,1**
Oil/coolant heat exchanger	**1 ± 0,1**
Turbocharger lubrication pipe	**2,2 ± 0,2**
	Injection circuit
Injector fixing flange nut	
Tightening	**0,4 ± 0,1**
Angular tightening	**65° ± 5°**
Unions on fuel high pressure common injection rail	**2,3 ± 0,2**
Fuel high pressure pump	
Union on diesel injector	
Fuel high pressure pump pinion	**5 ± 0,5**
Union on fuel high pressure pump	**2,3 ± 0,2**
	Cooling circuit
Coolant pump	**1 ± 0,2**

C3	SPECIAL FEATURES - TIGHTENING TORQUES (m.daN)

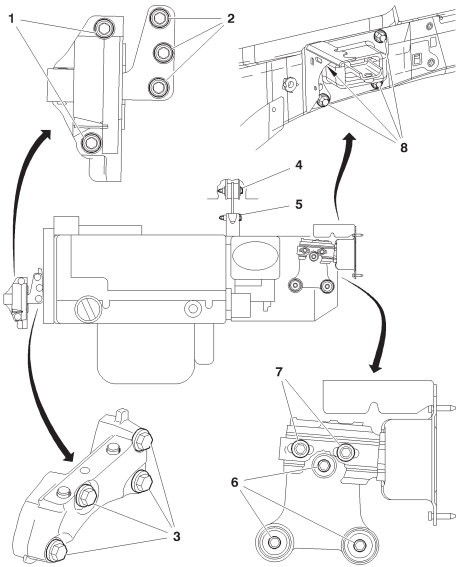

B1BP2MNP

Engine: 9HX

RH engine support

Screw (1)	: 6 ± 0,6
Screw (2)	: 6 ± 0,6

RH lower engine support

Screw (3)	: 5,7 ± 0,5

LH upper engine support

Screw (7)	: 6 ± 0,6
Screw (8)	: 5,5 ± 0,5

LH lower engine support

Screw (6)	: 5,4 ± 0,5

Torque reaction rod

Screw (4)	: 6 ± 0,6
Screw (5)	: 6 ± 0,6

SPECIAL FEATURES - TIGHTENING TORQUES (m.daN)

Engine: 9HX

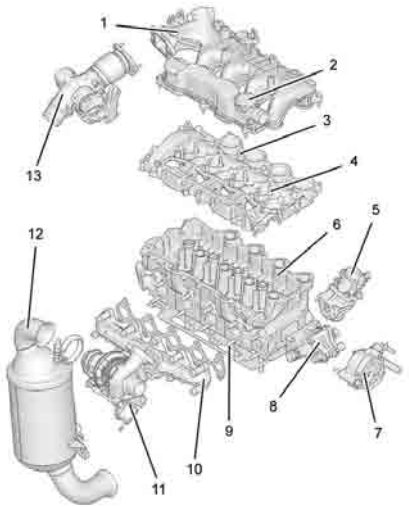

B1BP39YP

Cylinder head		
1	**Air inlet manifold**	**1 ± 0,1**
2	**Oil trap**	**1 ± 0,1**
3	**Camshaft bearing covers** Pre-tightening Tightening	 **0,5 ± 0,1** **1 ± 0,1**

(3) camshaft bearing cover screws
(4) camshaft bearing cover studs

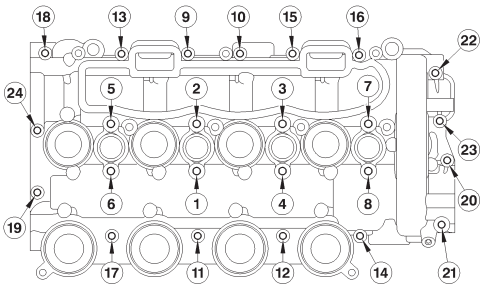

B1DP1D7D

SPECIAL FEATURES - TIGHTENING TORQUES (m.daN)

Engine: 9HX

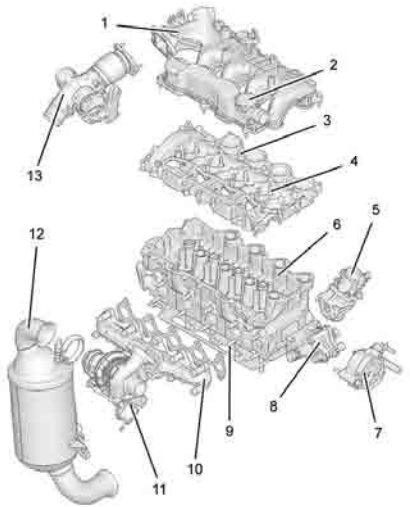

B1BP39YP

	Cylinder head	
4	**Camshaft bearing cover studs** Pre-tightening Tightening	 **0,5 ± 0,1** **1 ± 0,1**
5	**Exhaust gas recycling electrovalve (EGR)**	**1 ± 0,1**
6	**Cylinder head** Pre-tightening Tightening Angular tightening	 **2 ± 0,2** **4 ± 0,5** **260° ± 5°**
7	**Vacuum pump**	**1,8 ± 0,2**
8	**Coolant outlet housing** Pre-tightening Tightening	 **0,3 ± 0,1** **0,7 ± 0,1**

(6) Sequence for tightening the cylinder head bolts

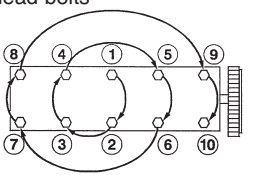

B1DP05BC

SPECIAL FEATURES - TIGHTENING TORQUES (m.daN)

Engine: 9HX

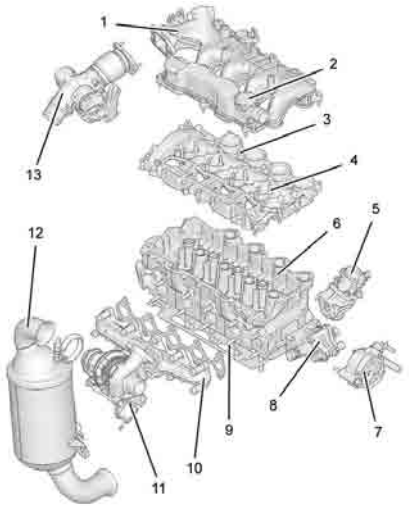

B1BP39YP

Cylinder head		
9	**Exhaust manifold**	**2,5 ± 0,2**
10	**Exhaust manifold stud**	**1 ± 0,2**
11	**Turbocompressor nuts**	**2,6 ± 0,6**
12	**Catalytic converter nuts**	**2 ± 0,1**
13	**Air flowmeter** Pre-tightening Tightening	 **0,1** **0,9 ± 0,2**

SPECIAL FEATURES - TIGHTENING TORQUES (m.daN)

Engine: 9HX

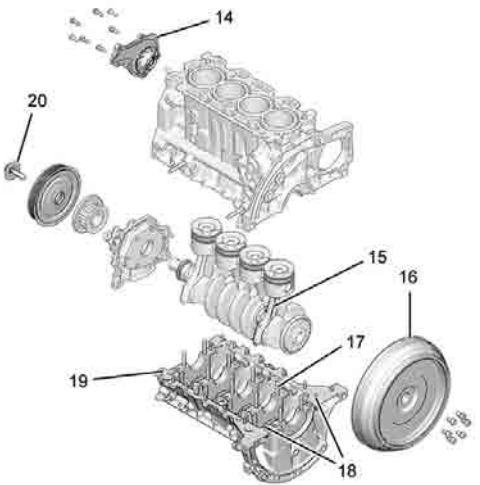

B1DP1LKP

	Cylinder block	
14	**Coolant pump** Pre-tightening Tightening	 **0,3 ± 0,1** **0,9 ± 0,1**
15	**Con rod screws** Pre-tightening Angular tightening	 **1 ± 0,1** **100° ± 5°**
16	**Flywheel (according to equipment)** Pre-tightening Angular tightening	 **1,7 ± 0,2** **75° ± 5°**
	Clutch mechanism	**2 ± 0,2**

(16) Sequence for tightening the flywheel screws

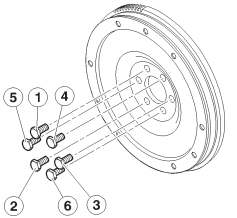

B1CP0GKC

SPECIAL FEATURES - TIGHTENING TORQUES (m.daN)

Engine: 9HX

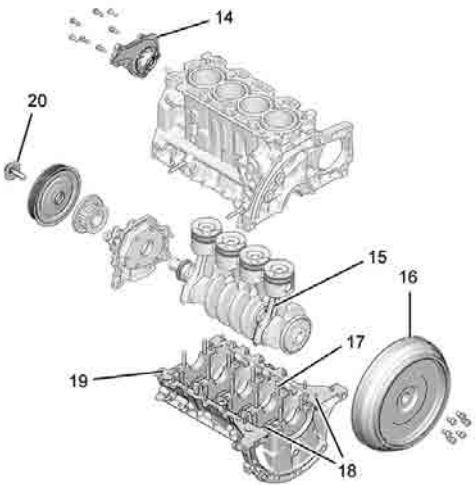

B1DP1LKP

Cylinder block		
17	**Bearing cap fixing screwss**	
	Pre-tightening	**1 ± 0,2**
	Slackening	**180°**
	Tightening	**3 ± 0,3**
	Angular tightening	**140° ± 5°**
18	**Crankshaft bearing cap cover screws**	**0,8 ± 0,3**
19	**Crankshaft bearing cap cover screws**	
	Pre-tightening	**0,6 ± 0,2**
	Tightening	**0,8 ± 0,3**
20	**Accessories drive pulley**	
	Pre-tightening	**3,5 ± 0,4**
	Angular tightening	**190° ± 5°**

SPECIAL FEATURES - TIGHTENING TORQUES (m.daN)

Engine: 9HX

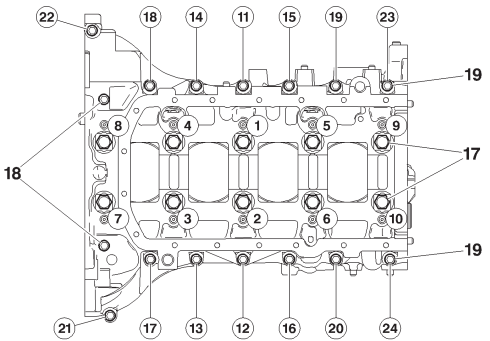

B1DP1LLD

Cylinder block		
	Crankshaft bearing cap cover	
	Tightening Method:	
	Pre-tighten the **10** screws **(17) (from 1 to 10)** to	**1**
	Pre-tighten the **14** screws **(19) (from 11 to 24)** to	**0,6**
	Tighten the **2** screws **(18)** *(inside the flywheel bell housing)* to	**0,8**
	Slacken the screws **(17)** by	**180°**
	Tighten the **10** screws **(17) (from 1 to 10)** to	**3**
	Tighten the screws **(17) (from 1 to 10)** by	**140°**
	Tighten the **14** screws **(19) (from 11 to 24)** to	**0,8**

Sequence for tightening the screws (17), (18) and (19)

(17) Bearing cap fixing screws *(screws M9)*

(18) Crankshaft bearing cap cover screws *(screws M6)*

(19) Crankshaft bearing cap cover screws *(screws M6)*

SPECIAL FEATURES - TIGHTENING TORQUES (m.daN)

Engine: 9HX

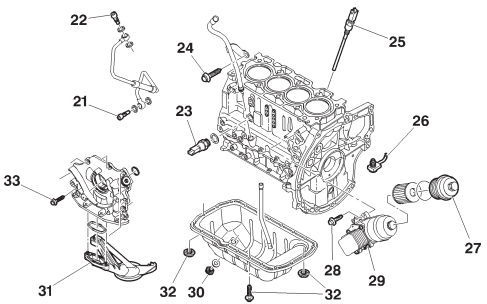

B1DP1LMD

Lubrification		
21	Turbocharger lubrication tube	3 ± 0,5
22		2,1 ± 0,3
23	Oil pressure switch	2 ± 0,2
24	Oil gauge	0,8 ± 0,2
25	Electric oil gauge	2,7 ± 0,5
26	Piston skirt spray jets	2 ± 0,5
27	Oil filter cover	2,5 ± 0,5
28	Oil filter support	1 ± 0,2
29	Coolant/oil heat exchanger	1 ± 0,1
30	Drain plug	2,5 ± 0,3
31	Oil induction strainer	1 ± 0,1
32	Oil sump	1,2 ± 0,2
33	Oil pump assembly	0,9 ± 0,1

SPECIAL FEATURES - TIGHTENING TORQUES (m.daN)

Engine: 9HX

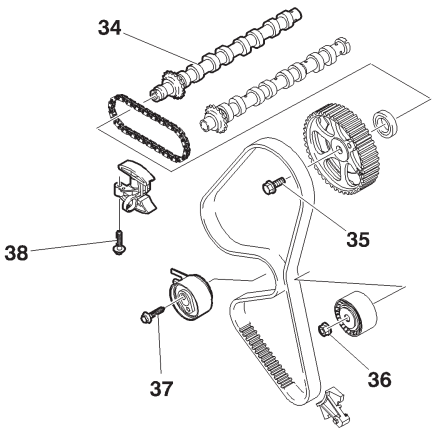

B1EP1HQD

Timing		
34	**Camshaft bearing caps**	**1 ± 0,1**
35	**Camshaft pulleys** Pre-tightening Angular tightening	 **2 ± 0,2** **50° ± 5°**
36	**Timing belt guide roller**	**3,7 ± 0,3**
37	**Timing belt tensioner roller**	**2,7 ± 0,2**
38	**Timing chain tensioner**	**1 ± 0,1**

SPECIAL FEATURES - TIGHTENING TORQUES (m.daN)

Engine: 9HX

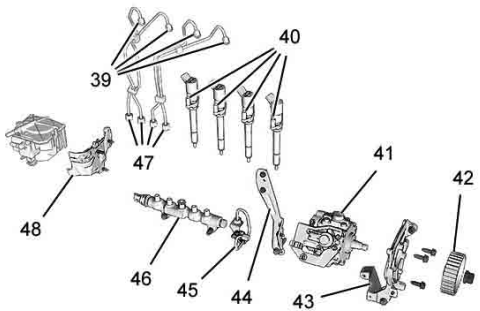

B1HP22SD

Injection circuit		
39	**Union on injector** Pre-tightening Tightening	 **2 ± 0,5** **2,5 ± 0,3**
40	**Injector fixing flange but** Pre-tightening Angular tightening	 **0,5 ± 0,5** **65° ± 5°**
41	**Diesel injection pump on support**	**2,2 ± 0,3**
42	**Diesel injection pump pulley**	**5 ± 0,5**
43	**Diesel fuel high pressure pump front support**	**2 ± 0,5**

SPECIAL FEATURES - TIGHTENING TORQUES (m.daN)

Engine: 9HX

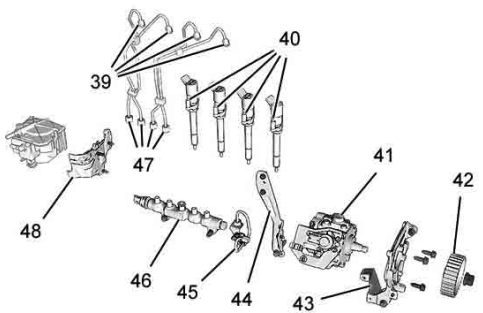

B1HP22SD

	Injection circuit	
44	**Diesel fuel high pressure pump rear support**	**2 ± 0,5**
45	**Union on diesel high pressure pump**	
	Pre-tightening	**2 ± 0,5**
	Tightening	**2,5 ± 0,3**
46	**Fuel high pressure common injection rail on engine block**	**2,2 ± 0,3**
47	**Unions on fuel high pressure common injection rail**	
	Pre-tightening	**2 ± 0,5**
	Tightening	**2,5 ± 0,3**
48	**Fuel filter support**	**0,7 ± 0,1**

SPECIAL FEATURES - TIGHTENING TORQUES (m.daN)

Engine: 9HX

Version without particle filter

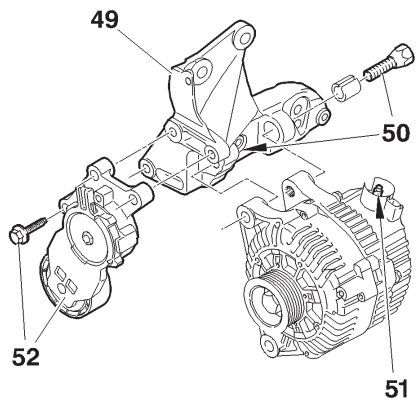

D1AP02NC

Accessories		
49	Multifunction support	2 ± 0,4
50	Alternator fixing screw	4,9 ± 1,2
51	Alternator power circuit fixing nuts	1,4 ± 0,2
52	Accessories tensioner roller	2,1 ± 0,2

SPECIAL FEATURES - TIGHTENING TORQUES (m.daN)

Engine: 9HX

Version without aircon

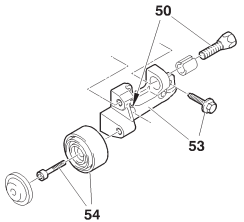

D1AP02PC

Accessories		
53	Accessories support	2 ± 0,5
54	Guide roller	4,5 ± 0,5

Version with aircon

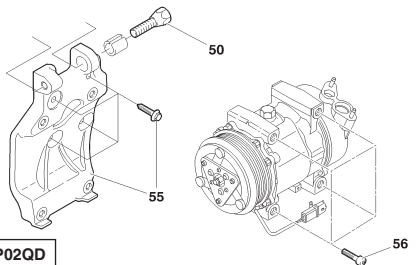

D1AP02QD

Accessories		
55	Aircon compressor support	2 ± 0,5
56	Aircon compressor screw	2,4 ± 0,5

SPECIAL FEATURES - CYLINDER HEAD TIGHTENING

Petrol engines

Cleaning to be carried out just prior to refitting.

WARNING: Clean the contact faces with the approved CITROËN cleaning product.

Do not use abrasives or cutting tools on the contact faces.

The contact faces must not bear any traces of impact or scratching.

Insert a tap in the threads of the holes in the cylinder block receiving the cylinder head bolts.

Brush the threads of the cylinder head bolts.

Oil the threads and under the heads of the bolts, using **MOLYKOTE G RAPID PLUS.**

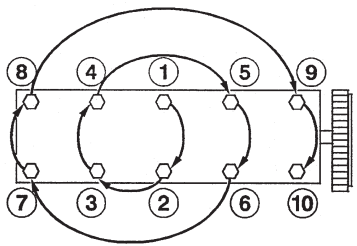

B1DP05BC

Engines	Tightening (m.daN)		Cylinder head bolts (Max. reusable length in mm)
HFX - KFV	Tightening Angular tightening	2 ± 0,2 140° ± 5°	175,5
NFU	Tightening Angular tightening	2 ± 0,2 140° ± 5°	122
KFU	Pre-tightening Tightening Angular tightening	1,5 ± 0,2 2,5 ± 0,2 200° ± 5°	119

NOTE: Tightening of the cylinder head after a repair is prohibited.

SPECIAL FEATURES - CYLINDER HEAD TIGHTENING

Diesel engines

Cleaning to be carried out just prior to refitting.

WARNING: Clean the contact faces with the approved CITROËN cleaning product.

Do not use abrasives or cutting tools on the contact faces.

The contact faces must not bear any traces of impact or scratching.

Insert a tap in the threads of the holes in the cylinder block receiving the cylinder head bolts.

Brush the threads of the cylinder head bolts.

Oil the threads and under the heads of the bolts, using **MOLYKOTE G RAPID PLUS.**

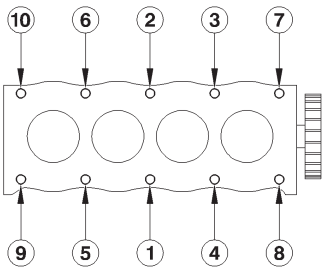

B1DP1CLC

Engines	Tightening (m.daN)		Cylinder head bolts (Max. reusable length in mm)
8HX - 8HZ 8HY	Pre-tightening Tightening Angular tightening	**2 ± 0,2** **4 ± 0,4** **230° ± 5°**	**149**
9HX	Pre-tightening Tightening Angular tightening	**2 ± 0,2** **4 ± 0,4** **260° ± 5°**	**147**

NOTE: Tightening of the cylinder head after a repair is prohibited.

All Types	BELT TENSION/SEEM UNITS CORRESPONDENCE TABLE	
↓ **4099-T** (C.TRONIC.105)	← Tools →	**4122-T** (C.TRONIC.105.5) ↓

TYPE DE COURROIES / 1 daN = 1 Kg / daN		5	10	15	20	25	30	35	40	45	50	55	60	65	70	75	80	85	90	95	100
S		18	28	36	44	51	58	64	70	76	82	88	94	100	106	112					
		18	28	36	44	51	58	64	70	76	82	88	94	100	106	112					
P	E5	18	23	27	31	34	37	40	43	46	49	52	54	56	58	60	62	64	66	68	
	E6	25	32	39	45	50	54	58	62	66	70	74	78	81	84	86	88	89	90	91	
		32	41	48	55	62	69	76	83	90	96	102	108	114	120	126	132	138	144	150	
P (10)	E6	27	36	43	49	55	61	66	71	76	80	84									
		32	41	49	57	63	69	75	81	87	93	99									
P (11)	E6	26	35	42	48	53	58	63	68	73	78	82									
		30	40	47	54	61	68	75	81	87	93	99									
P (13)	E7	45	55	65	74	83	89	95	101	107	113	119									
		36	49	52	64	73	80	86	92	98	104	110									
T (10)	E7	28	34	39	44	48	52	56	60	64	68	71									
		34	41	48	55	62	69	76	83	89	96	102									
T (11)	E8	32	39	45	51	56	61	66	71	76	79	81									
		37	43	51	59	66	73	80	86	92	98	104									
T (13)	E9	52	60	67	74	81	88	94	100	106	110	114									
		49	57	63	69	75	81	87	93	99	105	111									

AUXILIARY EQUIPMENT DRIVE BELT

	TU		ET		TU		DV			
	1	3			5		4			6
	JP		J4		JP4	JP4S	TD		TED4	ATED4
Engine type	**HFX**	**KFV**	**KFU**	**KFU (*)**	**NFU**	**NFS**	**8HX**	**8HZ**	**8HY**	**9HX**
C2	X	X			X	X	X	X		
C3	X	X	X	X	X		X	X	X	X
C3 Pluriel		X			X		X	X		
See pages:	**80 to 81**		**82 to 83**	**84 to 86**	**80 to 81**		**87 to 88**		**89**	**90 to 91**

(*) = Accessories drive belt for **STOP AND START.**

AUXILIARY EQUIPMENT DRIVE BELT

Engines: All Types Petrol and Diesel

Tools.

- Belt tension measuring instrument: **4122 - T (C.TRONIC 105.5).**

WARNING: If using tool 4099-T (C.TRONIC 105)

Essential.

- Before refitting the auxiliary equipment drive belt, check that:

- 1 / The roller(s) rotate freely *(no play or stiffness).*

- 2 / The belt is correctly engaged in the grooves of the various pulleys.

C2 - C3 - C3 PLURIEL

AUXILIARY EQUIPMENT DRIVE BELT

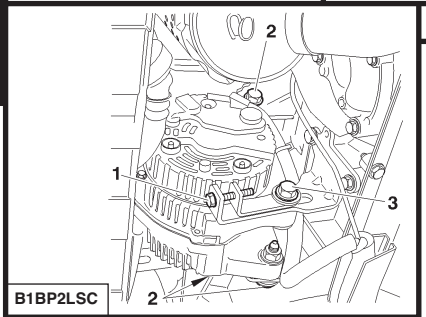

B1BP2LSC

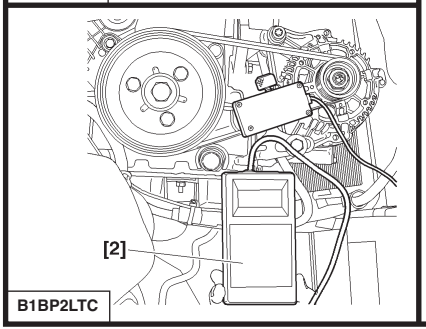

B1BP2LTC

Engines: HFX - KFV - NFU - NFS

Tools.

[1] Pliers for removing plastic pegs **: 7504 -T**
[2] Belt tension measuring instrument **: 4122-T**

Vehicle without air conditioning.

Removing.

Slacken:

- Screw **(2).**
- Screw **(3).**
- Tensioning screw **(1).**

Push the alternator back towards the engine.
Remove the belt.

Refitting

Refit the belt.
Respect the following sequence:
- Crankshaft pinion.
- Alternator pulley.

Place tool **[2]** on the belt.
Tighten screw **(1)** to achieve a tension of:
55 ± 3 SEEM units.
Tighten:
- Screw **(3)**.
- Screw **(2)**.

Remove tool **[2]** and complete the refitting.

AUXILIARY EQUIPMENT DRIVE BELT

C2 - C3 - C3 PLURIEL

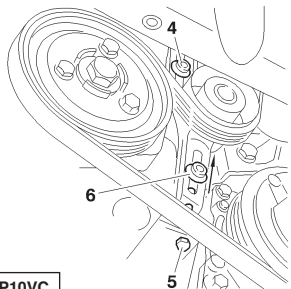

B1BP10VC

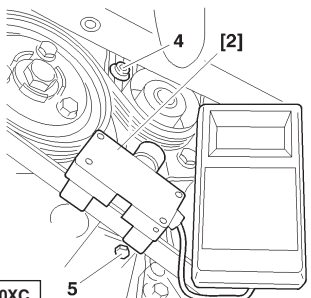

B1BP10XC

Engines: HFX - KFV - NFU - NFS

Vehicle with air conditioning.

Removing.

Slacken:
- Screws **(6)**, **(4)** and **(5)**.
- Fully detension the belt by acting on the tensioner roller.
- Remove the accessories drive belt.

Refitting.

Respect the following sequence:
- Crankshaft pinion.
- Aircon compressor pulley.
- Guide roller.
- Alternator pulley.
- Tensioner roller.

Place tool **[2]** on the belt.
- Tighten screw **(5)** to achieve a belt tension of:
  120 ± 3 SEEM units.
- Tighten screws **(4)** and **(6)**.
- Remove tool **[2]**.
- Complete the refitting.

C3	AUXILIARY EQUIPMENT DRIVE BELT

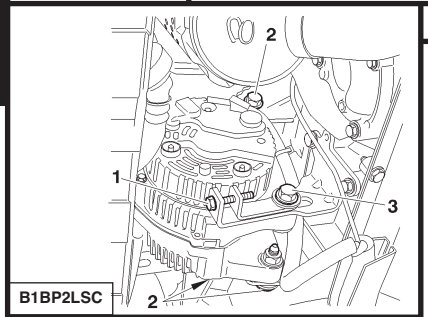

B1BP2LSC

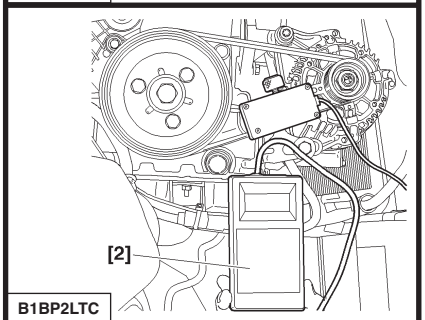

B1BP2LTC

Engine: KFU

Tools.

[1] Plyers for removing plastic pegs **: 7504 -T**
[2] Belt tension measuring instrument **(SEEM)** **: 4122 -T**

Removing.
Raise and support the vehicle, front wheels hanging.
Disconnect the battery.
Remove the front RH wheel and the front RH splash-shield, using tool **[1]**.

Vehicle without air conditioning.
Removing.
Slacken the tension, screw **(2)**, screw **(3)** and screw **(1)**.
Push back the alternator towards the engine.
Remove the auxiliary equipment drive belt.
Refitting.
Refit the auxiliary equipment drive belt.
Respect the following sequence:
- Crankshaft pinion, alternator pulley.
- Position tool **[2]** on the belt. Tighten the screw **(1)** to tension the belt to **55 ± 3 SEEM units.**
- Tighten screw **(3)**, screw **(2).**
- Remove tool **[2]**.
- Complete the refitting in the opposite order to removal.

AUXILIARY EQUIPMENT DRIVE BELT

C3

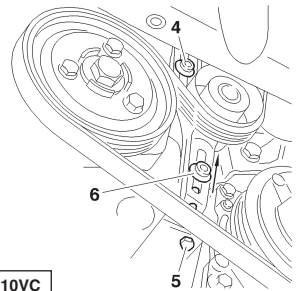

B1BP10VC

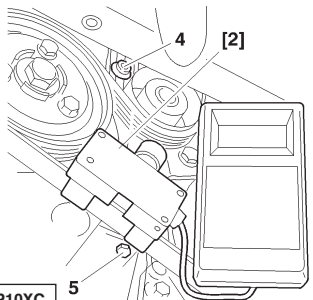

B1BP10XC

Engine: KFU

Vehicle with air conditioning.

Removing.

Slacken the tension, screw **(6)**, screw **(4)** and screw **(5)**.
Completely detension the belt by acting on the tensioner roller.
Remove the auxiliary equipment drive belt.

Refitting.

Refit the auxiliary equipment drive belt.
Respect the following sequence:
- Crankshaft pinion, aircon compressor pulley, alternator pulley guide roller and guide roller.
- Position tool **[2]** on the belt. Tighten the screw **(5)** to tension the belt to
  120 ± 3 SEEM units.
- Tighten screw **(4)**, screw **(6)**.
- Remove tool **[2]**.
- Complete the refitting in the opposite order to removal.

C3	AUXILIARY EQUIPMENT DRIVE BELT for «STOP AND START»

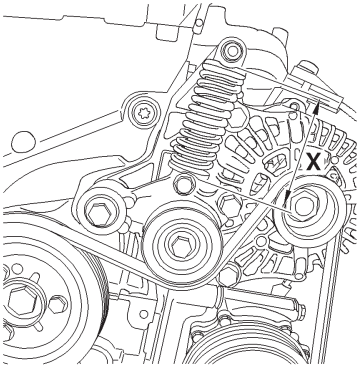

B1EP1J6C

Engine: KFU

Tools.

[1] Compression tool **: 4388-T**

IMPERATIVE: Respect the precautions to be taken prior to any operation.

Checking the «stop and start» accessories belt.

Checking the belt extension.
Disconnect the battery.
Using a vernier gauge, measure the extension of the tensioner.
The length **«X»** should be between **77.6 mm** and **85.6 mm**.
Replace the accessories belt if the extension value is greater than **85.6 mm**.

Visual checking of the belt.
Remove the accessories belt, using tool **[1]** *(see corresponding operation)*.
Carefully twist the belt to check that there is no cracking or splitting, whether on the back of the belt or in the notches.

AUXILIARY EQUIPMENT DRIVE BELT for «STOP AND START» C3

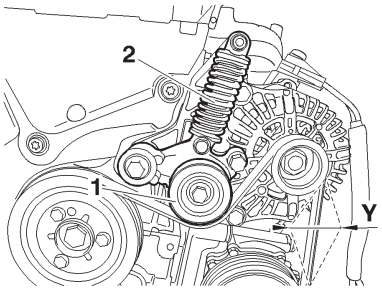

B1EP1J7C

Engine: KFU

Dynamic checking.

Raise and support the vehicle, front wheels hanging.
Start the engine, engage **1st** gear, keep your foot on the brake.
Accelerate up to **1500 rpm** and visually check the thrashing of the belt.
The thrashing value for the belt should be less than **Y = 40 mm**.
Check that there is no play or tight spot on the pulley **(1)**.
Replace the tensioner **(2)**:
- If there is excessive thrashing on the belt.
- If the belt slips every time you start the engine *(new belt)*.

IMPERATIVE: Never release the tensioner only. Use the tool [1] to decompress.

Return the vehicle to the ground.
Reconnect the battery.

ESSENTIAL: Perform the operations that are necessary after a reconnection of the battery *(see corresponding operation)*.

C3	AUXILIARY EQUIPMENT DRIVE BELT for «STOP AND START»

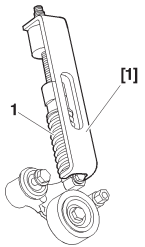

B1EP1J8C

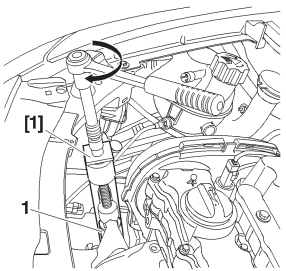

B1BP3BEC

Engine: KFU

Tools.

[1] Compression tool **: 4388-T**
[2] Pliers for removing plastic pins **: 7504-T**

IMPERATIVE: Respect the precautions to be taken prior to any operation.

Removing-refitting the «stop and start» accessories belt.

Raise and support the vehicle, front wheels hanging.
Disconnect the battery.
Remove the front RH wheel and the front RH splash-shield, using tool **[2]**.
Position tool **[1]** on the tensioner **(1)**.
Compress the tensioner **(1)**.

IMPERATIVE: The tensioner (1) must be compressed slowly. The spanner should take 10 seconds for one rotation.

Remove the accessories drive belt.

Refitting.

Refit the accessories drive belt.
Keep to the following sequence: crankshaft pinion, aircon compressor pulley, reversible alternator pulley and tensioner roller.
Release the tensioner, using tool **[1]**.

IMPERATIVE: Never release the tensioner only. Use the tool [1] to decompress.

Remove the tool **[1]**.
Refit the front RH splash-shield and the front RH wheel.
Return the vehicle to the ground and reconnect the battery.

ESSENTIAL: Perform the operations that are necessary after a reconnection of the battery *(see corresponding operation).*

AUXILIARY EQUIPMENT DRIVE BELT

C2 - C3 - C3 PLURIEL

With compressor and alternator

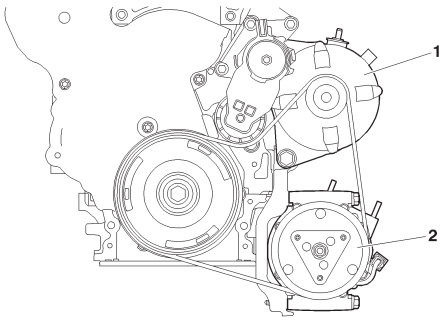

B1BP2MJD

Engines: 8HX - 8HZ

Tools.

[1] Pliers for removing plastic pegs	**: 7504-T**
[2] Tensioner roller compression lever	**: (-).0194.E**
[3] Tensioner roller setting peg **Ø 4 mm**	**: (-).0194.F**

Removing.

Disconnect the battery negative cable.
Raise and support the vehicle, wheels hanging.
Remove the front RH wheel.
Move aside the splash-shield, using tool **[1]**.

IMPERATIVE: In the case of belt re-use, mark the direction of rotation of the belt. If the index on the tensioner roller is outside the marks, change the auxiliary equipment drive belt.

Remove:
- The alternator **(1)**.
- The aircon compressor **(2)**.

Detension the auxiliary belt tensioner roller, using tool **[2]**.
Position the peg **[3]**. Remove the auxiliary drive belt.

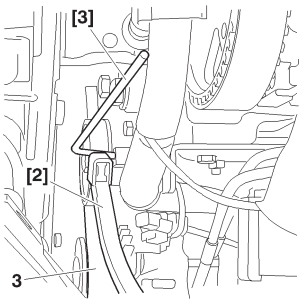

B1BP2MKC

AUXILIARY EQUIPMENT DRIVE BELT

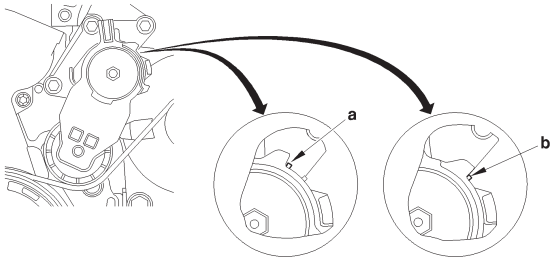

B1EP18UD

Engines: 8HX - 8HZ

Markings on the dynamic tensioner roller.

«a» Position of «maximum wear» of the auxiliary drive belt.
«b» Normal position.

Refitting.

NOTE: Check that the tensioner roller moves freely *(no tight spot)*. If this is not the case, replace the tensioner roller.

Respect the direction of fitting of the drive belt.

Complete the setting of the belt, of both sides, by means of the tensioner roller. Make sure that the drive belt is correctly positioned in the **«V»** grooves of the various pulleys.

Move the tool **[2]** on the tensioner roller to remove the peg **[3]**.

AUXILIARY EQUIPMENT DRIVE BELT

C3

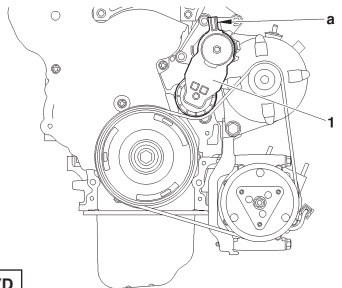

B1BP2MYD

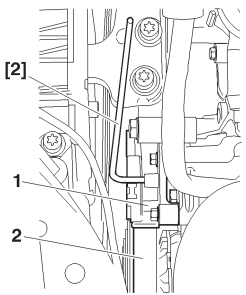

B1BP2MZC

Engine: 8HY

Tools.

[1a] Dynamic tensioner roller lever : **(-).0194-E1**
[1b] Lever extension : **(-).0194-E2**
[2] Accessories belt roller locking peg **Ø 4 mm** : **(-).0194-F**

Removing.
Pivot the tensioner roller support **(1)** *(clockwise)*, using tools **[1a]** and **[1b]** at **«a»**.
Remove the belt.
Immobilise the support **(1)** of the tensioner roller, using tool **[2]**.
Remove the auxiliary drive belt **(2)**.

IMPERATIVE: Ensure that the tensioner rollers turn freely *(no play, no tight spot)*.

Refitting.
Refit the belt.
Move the tool **[1]** on the tensioner roller to remove the peg **[2]**.

ESSENTIAL: Make sure that the belt is correctly positioned in the various pulley grooves.

C3	AUXILIARY EQUIPMENT DRIVE BELT

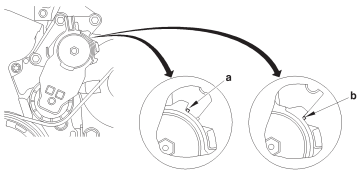

B1EP18UD

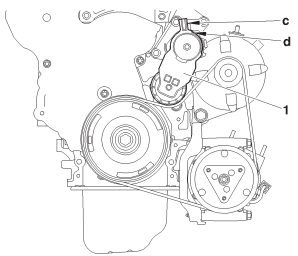

B1BP3ACD

Engine: 9HX

Tools.

[1a] Dynamic tensioner roller lever	**: (-).0194-E1**
[1b] Lever extension	**: (-).0194-E2**
[2] Dynamic tensioner roller locking peg	**: (-).0194-F**

IMPERATIVE: Respect the safety and cleanliness requirements specific to High pressure Diesel injection (HDi) engine versions.

Markings on the dynamic tensioner roller.
«a» position **«maximum wear»** of the auxiliaries drive belt.
«b» Nominal position.

Removing.

WARNING: Mark the direction of fitting of the auxiliaries drive belt in the case of re-use of the belt.

Compress the dynamic tensioner roller **(1)** by acting at **«c»** *(clockwise)*, using tool **[1]**.
Peg using tool **[2]** at **«d»**.
Keep the dynamic tensioner roller **(1)** compressed and remove the auxiliaries drive belt.

AUXILIARY EQUIPMENT DRIVE BELT

C3

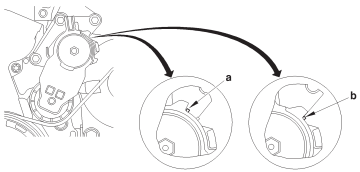

B1EP18UD

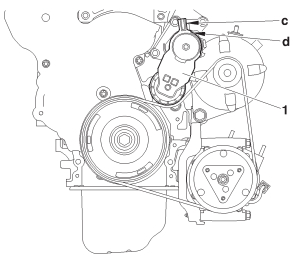

B1BP3ACD

Engine: 9HX

Refitting.

WARNING: Belt to be re-used, mark the direction of fitting of the belt.
Refit the auxiliaries drive belt.
Compress the tensioner roller **(1)** by acting at **«c»** *(clockwise)*, using tool **[1]**.
Remove tool **[2]**.

IMPERATIVE: Make sure that the auxiliaries drive belt is correctly positioned in the grooves of the various pulleys.

Refit:
- The front RH wheel.
- The sound-deadening under the engine.
- Reconnect the battery.

IMPERATIVE: Carry out the operations that are necessary following a reconnection of the battery *(see corresponding operation)*.

CHECKING AND SETTING THE VALVE TIMING

	TU		ET		TU		DV			
	1	3			5		4			6
	JP		J4		JP4	JP4S	TD		TED4	ATED4
Engine type	**HFX**	**KFV**	**KFU**	**KFU (*)**	**NFU**	**NFS**	**8HX**	**8HZ**	**8HY**	**9HX**
C2	X	X			X	X	X	X		
C3	X	X	X	X	X		X	X	X	X
C3 Pluriel		X			X		X	X		
See pages:	**94 to 103**		**104 to 109**		**94 to 103**		**110 to 117**		**118 to 126**	**127 to 134**

(*) = STOP AND START accessories drive belt.

RECOMMENDATIONS: TIMING BELT

Engines all types

Recommendations.

IMPERATIVE: After any repair involving removal of the timing belt, systematically replace:

- The timing belt,
- The tensioner roller fixing nut.

CHECKING AND SETTING THE VALVE TIMING

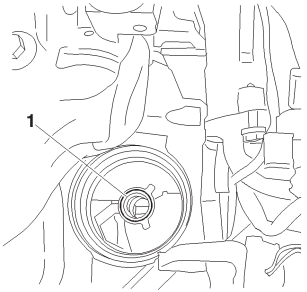

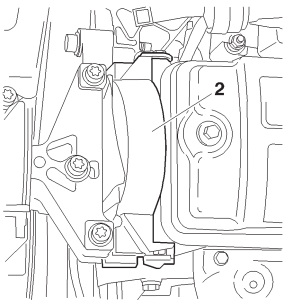

Engines: HFX - KFV - NFU - NFS

Tools.

[1] Engine flywheel peg	**: 4507-T.A**
[2] Camshaft pulley peg	**: 4507-T.B**
[3a] Camshaft peg	**: 4533-TA.C1**
[3b] Camshaft peg	**: 4533-TA.C2**
[4] Dynamic tensioner roller pin	**: 4200-T.H**
[5] Belt retaining pin	**: 4533-T.AD**
[6] Pliers for removing plastic pins	**: 7504-T**

Checking the valve timing.

Engines: HFX - KFV - NFU - NFS

Raise and support the front RH side of the vehicle.
Disconnect the battery positive terminal.
Engage **5th** gear.
Remove the oil filter **(1)**.

Engines: HFX - KFV

Remove :
- The timing top casing **(2)**.
- Turn the wheel to rotate the engine *(normal direction of rotation)*.
- Peg the camshaft pulley, using tool **[2]**.

B1BP2M7C B1BP2M8C

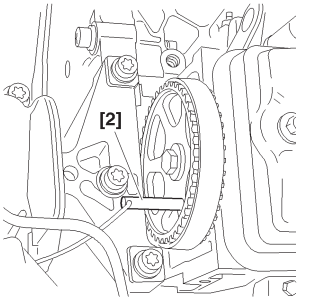

B1BP2M9C

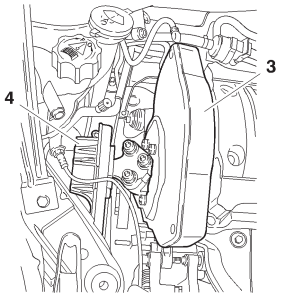

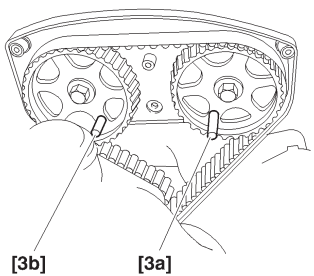

Engines: NFU - NFS

Checking the timing (continued).

Engines: NFU - NFS

Place a jack under the engine, peg the engine.
Remove:

- The engine support **(4)** complete.
- The timing casing **(3)**.
- The sparking plugs *(eases engine rotation)*.

Turn the wheel to rotate the engine *(normal direction of rotation)*.
Position the pegs **[3a]** and **[3b]**.
Peg the flywheel, using tool **[1]**.
If the setting is not correct, recommence the operation.
Remove the tools **[1]**, **[2]**, **[3a]** and **[3b]**.
Complete the refitting.

B1BP2MAC | B1EP18MC | B1BP2MBC

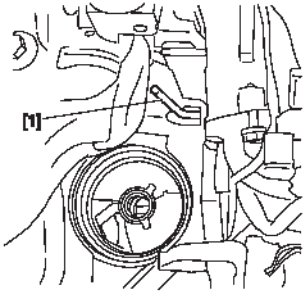

CHECKING AND SETTING THE VALVE TIMING

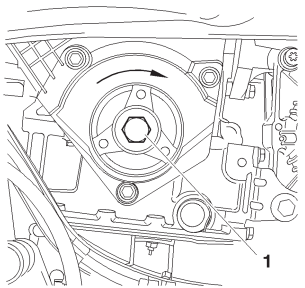

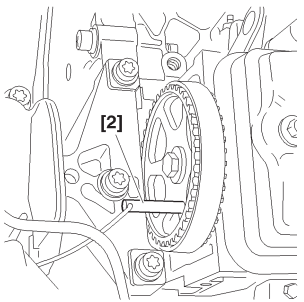

Engines: HFX - KFV

Setting the timing.

Preliminary operation.

Lift and support the vehicle, wheels hanging.
Disconnect the battery.
Remove:
- The front RH wheel.
- The splash-shield, using tool **[6]**.
- The accessories belt *(see corresponding operation)*.
- The crankshaft pulley.
- The oil filter.

Place a jack under the engine, peg the engine.

Removing.

Engines: HFX - KFV.

Turn the engine by means of screw **(1)** *(normal direction of rotation)*.
Remove the timing casings.
Peg the camshaft pinion, using tool **[2]**.
Peg the flywheel, using tool **[1]**.
Remove:
- The fixing screws **(2)**.
- The upper engine support **(3)**.

B1BP2MCC | B1BP2M9C | B1BP2MBC | B1BP2MDC

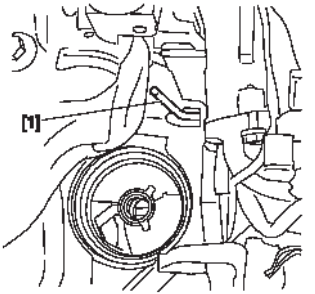

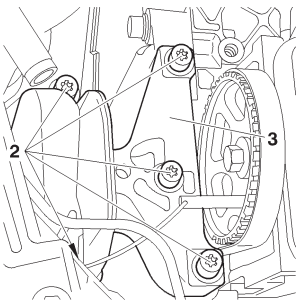

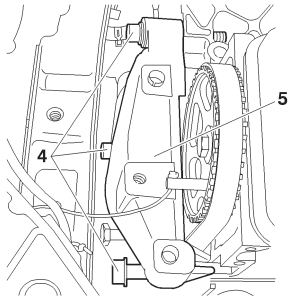

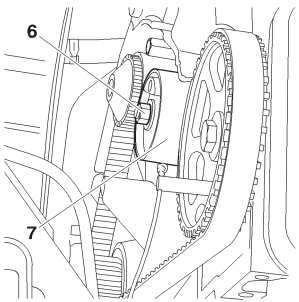

Engines: HFX - KFV

Setting the timing (continued).

Engines: HFX - KFV.

Slacken the screws **(4)** without removing them.

Remove the bottom engine support assembly **(5)** and the fixing screws **(4)**.

Slacken the nut **(6)**.

Completely detension the belt by acting on the tensioner roller **(7)**.

Remove the timing belt.

IMPERATIVE: Check that the tensioner roller turns freely *(no tight spot)*.

B1BP2MEC	B1EP18NC

CHECKING AND SETTING THE VALVE TIMING

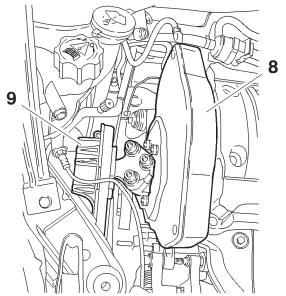

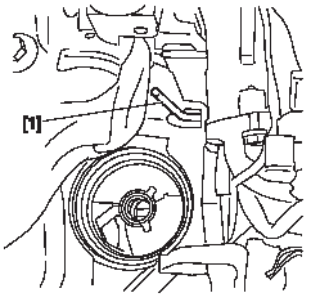

Engines: NFU - NFS

Engines: NFU - NFS.

Setting the timing (continued).

Remove:

- The bottom plastic casing.
- The engine support **(9)**.
- The middle support.
- The timing cover **(8)**.
- Peg the flywheel, using tool **[1]**.
- Position the tools **[3a]** and **[3b]**.

B1BP2MFC | B1BP2MBC | B1EP18MC

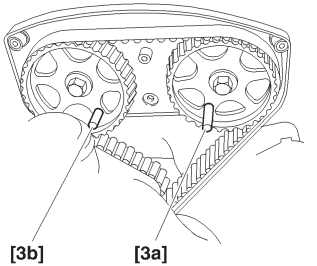

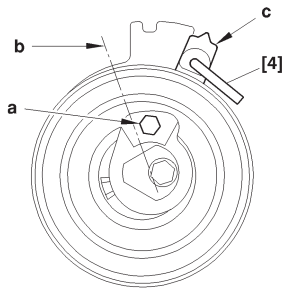

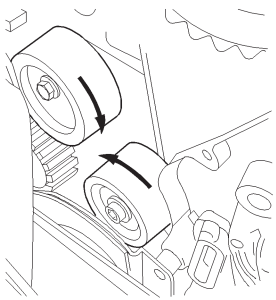

Engines: NFU - NFS

Setting the timing (continued).

Engines: NFU - NFS.

Slacken the tensioer roller.

Turn the tensioner roller so as to be able to position the tool **[4]**, with the aid of an Allen key placed at **«a»**.

Turn the tensioner roller towards the right to bring it to the index **«c»** in position **«b»**.

Peg the tensioner roller in this position in order to slacken the timing belt to the maximum.

IMPERATIVE: Never make the dynamic tensioner roller turn by a complete rotation.

Remove the timing belt **(8)**.

Check that the rollers **(9)** and **(10)** turn freely *(no tight spot)*.

B1EP18PC | B1EP18QC

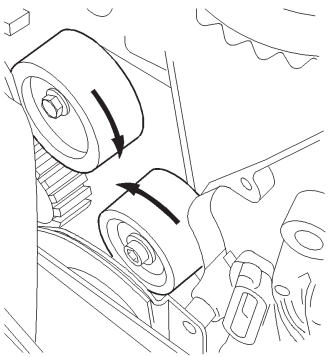

B1EP18QC

Engines: HFX - KFV

Setting the timing (continued).

Engines: HFX - KFV.

Refitting.

WARNING: Respect the direction of fitting of the belt: ***(the arrows «d» indicate the direction of rotation of the crankshaft).***

Refit the timing belt.

Position the timing belt, belt **«e»** well tensioned, in the following order:
- Crankshaft pinion, hold the belt using tool **[5]**.
- Camshaft pulley.
- Coolant pump pulley.
- Tensioner roller.
- Remove the pegs **[1]** and **[2]**.

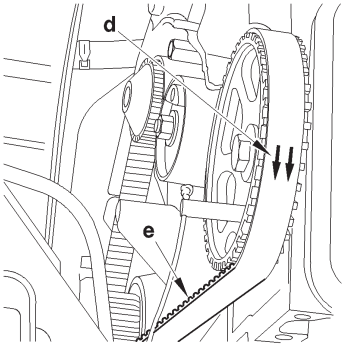

B1EP18RC

Engines: HFX - KFV - NFU - NFS

Setting the timing (continued).

Engines: HFX - KFV.

Refitting.

NOTE: Check that the pegs **[1]** and **[2]** are in place.

WARNING: Respect the direction of fitting of the timing belt, the arrows «d» indicate the direction of rotation of the crankshaft.

Refit the timing belt.

Position the timing belt, belt **«e»** well tensioned, in the following order:

- Crankshaft pinion, hold the belt using tool **[5]**.
- Camshaft pulley.
- Coolant pump pulley.
- Tensioner roller.

Remove the tools **[1]**, **[2]**.

Engines: NFU - NFS.

Fit the timing belt in position in the following order:

- Inlet camshaft pulley.
- Exhaust camshaft pulley.
- Guide roller.
- Crankshaft pulley.

Position tool **[5]**.

- Coolant pump pulley.
- Dynamic tensioner roller.

Remove the tools **[1]**, **[3]** and **[5]**.

CHECKING AND SETTING THE VALVE TIMING

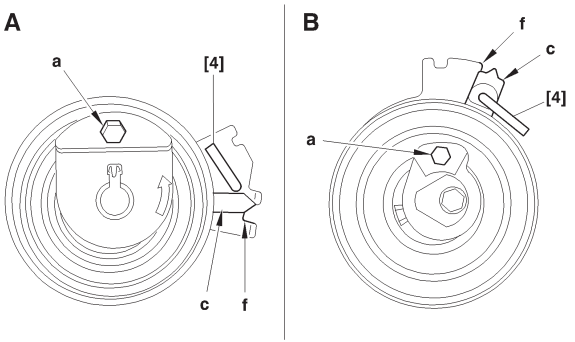

B1EP18SD

Engines: HFX - KFV - NFU - NFS

Timing belt overtensioned.

A: Engine: **HFX - KFV.**
B: Engine: **NFU - NFS.**

Turn the tensioner roller **(7)** with the aid of a hexagonal spanner at **«a»**.

Bring the index **«c»** to position **«f»**, to tension the belt to the maximum of the interval indicated.
Hold the tensioner roller **(7)**, using tool **[4]**.

Tighten the fixing nut of the tensioner roller, tightening to **1 ± 0,1 m.daN**.

Turn the crankshaft by **4 rotations** *(normal direction of rotation).*

IMPERATIVE: Never make the crankshaft rotate backwards.
Make sure that the timing is correctly set by refitting the tools **[1]**, **[2]** and **[3]**.
Remove the tools **[1]**, **[2]** and **[3]**.

CHECKING AND SETTING THE VALVE TIMING

C2 - C3 - C3 PLURIEL

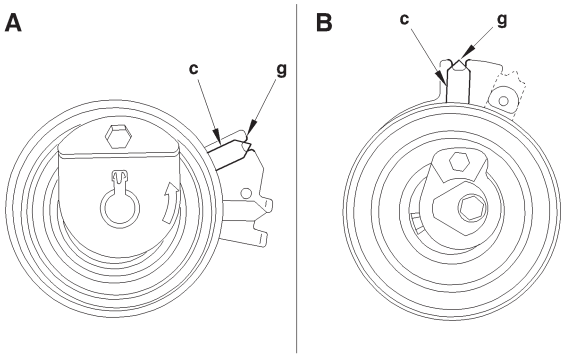

B1EP18TD

Engines: HFX - KFV - NFU - NFS

Adjusting the fitting tension of the timing belt.

A: Engine: **HFX - KFV.**
B: Engine: **NFU - NFS.**

Slacken the nut while maintaining the position of the tensioner roller, with the aid of a hexagonal spanner at «**a**».
Next bring the index «**c**» to its adjusting position «**a**».
The index «**c**» should not go beyond the notch «**g**».

WARNING: The index «c» must not go beyond the notch «g». If it should do this, restart the timing belt tensioning operation.

Hold the tensioner roller **(7)** in this position, with the aid of a hexagonal spanner.
Tighten the tensioner roller fixing nut to:

2 ± 0.2 m.daN. (HFX - KFV engines).
2.2 ± 0.2 m.daN. (NFU - NFS engines).

IMPERATIVE: The tensioner roller must not rotate during the tightening of its fixing. If it does, restart the timing belt tensioning operation.
Complete the refitting.

C3 CHECKING AND SETTING THE VALVE TIMING

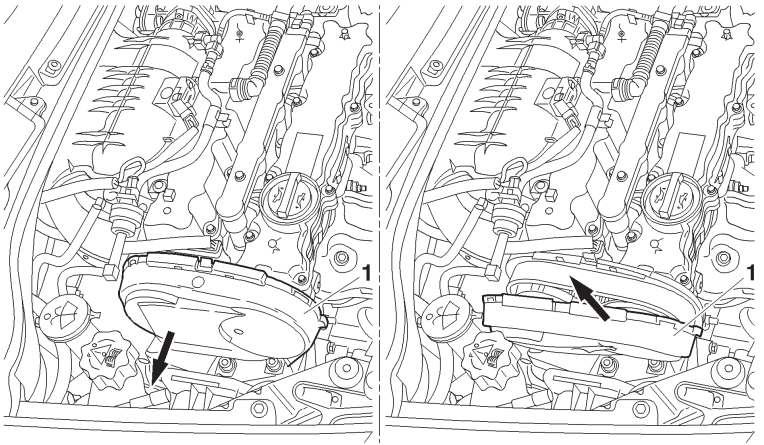

B1BP2ZJD

Engine: KFU

Tools.

[1] Flywheel setting peg	**: 4507-TA**
[2] Camshaft peg	**: 4533-TA.C1**
[3] Crankshaft setting peg	**: (-).0194.A**

Checking.

Raise and support the vehicle, wheels hanging.
Deconnect the battery.
Remove:
- the oil filter.
- the engine cover.
- the upper timing cover **(1)**.
- the sparking plugs, to facilitate rotation of the engine.

Turn the engine by means of the crankshaft screw.
Never turn the engine backwards.

CHECKING AND SETTING THE VALVE TIMING

C3

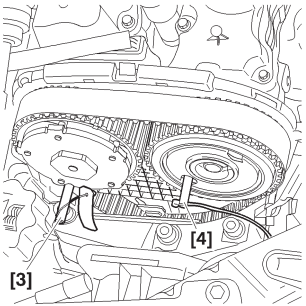

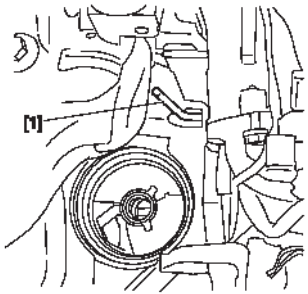

Engine: KFU

Position the tools **[3]** and **[2]**.

Peg the flywheel, using tool **[1]**.

NOTE: If the setting is not correct, recommence the operation.

Remove the pegs **[2]** and **[3]**.

Refit:

- The oil filter.
- The timing cover **(1)**.
- The engine cover.

Reconnect the battery.
Lower the vehicle.
Perform the operations that are necessary following a reconnection of the battery.

B1BP2ZTC	B1BP2MBC

C3 CHECKING AND SETTING THE VALVE TIMING

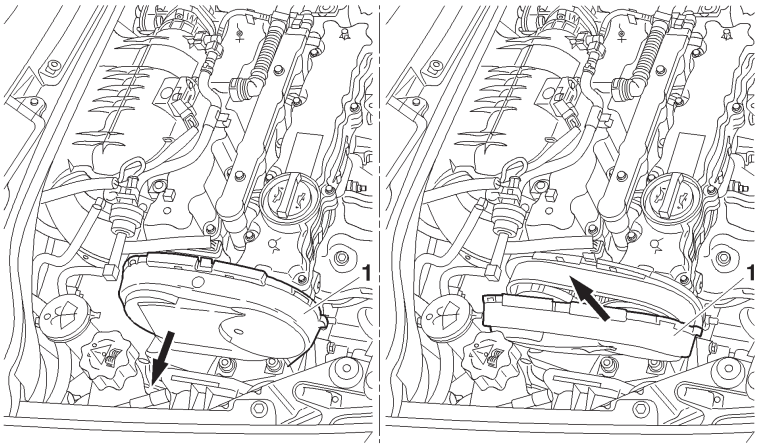

B1BP2ZJD

Engine: KFU

Tools.

[1] Flywheel setting peg	**: 4507-T**
[2] Engine support crossmember	**:**
[3] Crankshaft setting peg	**: (-).0194.A**
[4] Camshaft peg	**: 4533-TA.C1**
[5] Belt retaining pin	**: 4533-T.AD**

Removing.

Raise and support the vehicle, front wheels hanging.
Disconnect the battery.
Remove:
- The front RH wheel.
- The front RH splash-shield.
- The engine cover.
- The accessories drive belt *(see corresponding operation)*.
- The crankshaft pulley.
- The oil filter.

Remove the upper timing cover **(1)**.

CHECKING AND SETTING THE VALVE TIMING

C3

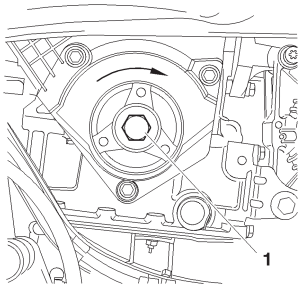

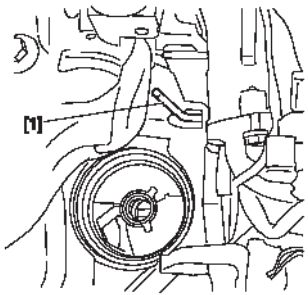

Engine: KFU

Rotate the engine by means of the crankshaft pinion screw **(2)** *(clockwise)* to bring it to the pegging position.

Peg the flywheel, using tool **[1]**.

Position the tools **[3]** and **[4]**.

Position the tool **[2]**.

Support the engine.

Remove the screws **(3)**.

The upper RH engine support.

B1BP2MCC | B1BP2MBC

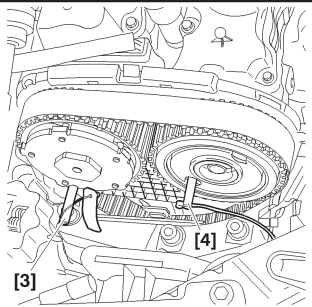

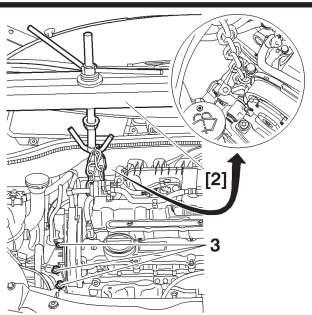

B1BP2ZTC | B1BP2ZUC

C3	CHECKING AND SETTING THE VALVE TIMING

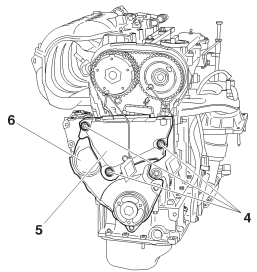

B1CP0F1D

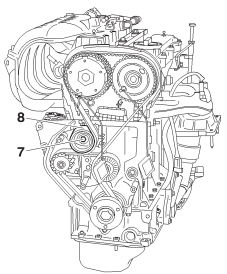

B1CP0F2D

Engine: KFU

Remove:
- The lower engine support assembly **(5)** and the fixing screw **(4)**.
- Remove the lower timing cover **(6)**.
- Slacken the nut **(7)**.
- Remove the timing belt.

IMPERATIVE: Check that the tensioner roller turns freely *(no tight spot)*.

Refitting.

Fit the *(new)* timing belt, in the following sequence:
- Inlet camshaft pulley.
- Exhaust camshaft pulley.
- Guide roller.
- Crankshaft pulley.
- Position the tool **[5]**.
- Coolant pump pulley.
- Dynamic tensioner roller.
- Remove tools **[3]**, **[4]** and **[5]**.

CHECKING AND SETTING THE VALVE TIMING

C3

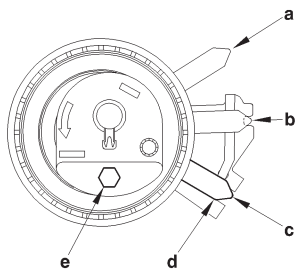

B1EP1DTC

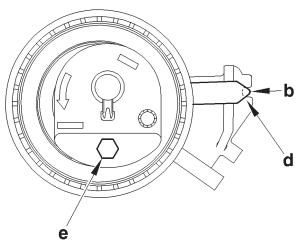

B1EP1DUC

Engine: KFU

Overtensioning the belt.
Position «**a**» **:** Tensioner roller in **slackened** position.
Position «**b**» **:** Tensioner roller in **normal** position.
Position «**c**» **:** Tensioner roller in **overtensioned** position.
Turn the tensioner roller **(8)** using an allen spanner at «**e**».
Position the index «**d**» in position «**c**», tension the belt to the maximum indicated.
Tighten the fixing nut of the tensioner roller to **2,1 ± 0,2 m.daN**.
Rotate the crankshaft by **four turns** *(normal direction of rotation)*.
IMPERATIVE: Never turn the crankshaft backwards.
Make sure the timing setting is correct by refitting the pegs **[1]**, **[3]** and **[4]**.
Remove the pegs **[1]**, **[3]** and **[4]**.
Adjusting the tension of the belt.
Slacken the nut, holding the position of the tensioner roller, by means of an allen spanner at «**e**».
Then bring the index «**d**» to its adjustment position «**b**».
WARNING: The index «d» should not go past the notch «b». If it should do so, repeat the operation to tension the timing belt.
Maintain the tensioner roller **(8)** in this position, using the allen spanner.
Tighten the fixing nut of the tensioner roller to **2,1 ± 0,2 m.daN**.
IMPERATIVE: The tensioner roller should not turn during the tightening of its fixing. If it should do so, repeat the operation to tension the timing belt.
Refitting.
Complete the refitting in the opposite order to removal.

CHECKING AND SETTING THE VALVE TIMING

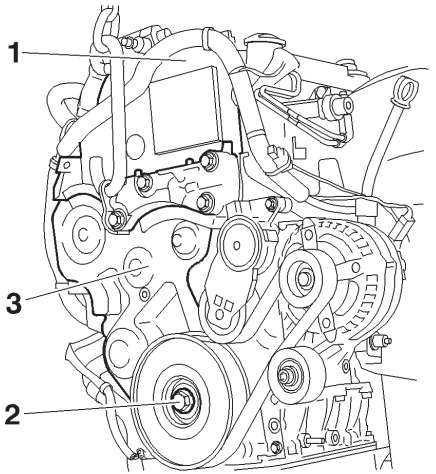

B1BP2LXC

Engines: 8HX - 8HZ

Tools.

[1] Pliers for removing plastic pegs	**: 7504-T**
[2] Lever for detensioning the dynamic tensioner roller	**: (-).0194.E**
[3] Engine flywheel setting peg	**: (-).0194.C**
[4] Camshaft setting peg	**: (-).0194.B**
[5] Crankshaft and high pressure pump setting peg	**: (-).0194.A**

Preliminary operations.

Remove:
- The front RH wheel.
- The front RH splash-shield, using tool **[1]**.
- The clips of the electrical harness on the upper timing cover.
- The accessories belt, using tool **[2]** *(see corresponding operation)*.

Check ing the setting.

Disconnect the battery negative cable.
Remove the upper timing cover **(1)**.
Rotate the engine using the screw **(2)** of the crankshaft pulley.

NOTE: The locking hole is located under the crankshaft bearing cap cover.
Undo the screw **(2)**.
Detension the auxiliary drive belt dynamic tensioner roller, using tool **[2]**.

CHECKING AND SETTING THE VALVE TIMING

C2 - C3 - C3 PLURIEL

Engines: 8HX - 8HZ

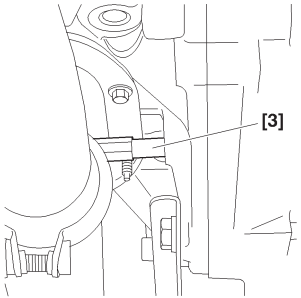

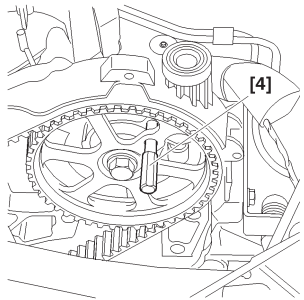

Checking the setting (continued).
Remove:
- The accessories drive belt.
- The accessories drive pulley.
- The lower timing cover **(3)**.

IMPERATIVE: The magnetic track should show no signs of damage and should not be approached by any other source of magnetism.
Reposition the screw **(2)**.
Remove tool **[3]**.
Rotate the engine by means of the crankshaft pinion screw **(2)** *(clockwise)* to bring it to the pegging position.
Position the tool **[4]**.
Peg the crankshaft pinion **(1)**, using tool **[5]**.
Peg the high pressure pump pinion, using tool **[5]**.
NOTE: Index **«a»** of the roller tensioner must be centred within the area **«b»**.
Check the correct positioning of index **«a»**.
Remove tools **[4]** and **[5]**.
Rotate the engine **ten** times.
Fit the tools **[4]** and **[5]**.
If pegging is not possible, carry out the operation to remove/refit the timing belt *(see corresponding operation)*.

B1JP03SC	B1EP18DC	B1EP18EC	B1EP18FC

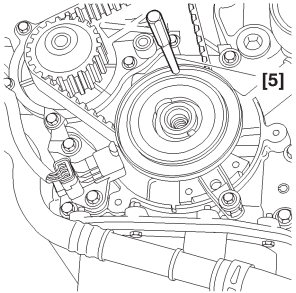

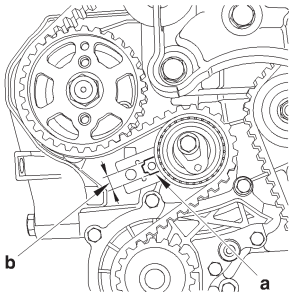

CHECKING AND SETTING THE VALVE TIMING

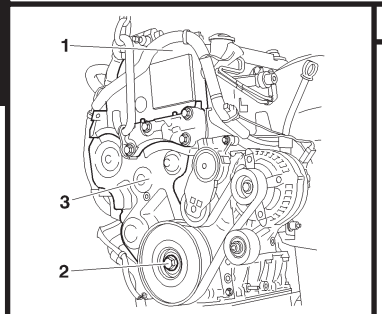

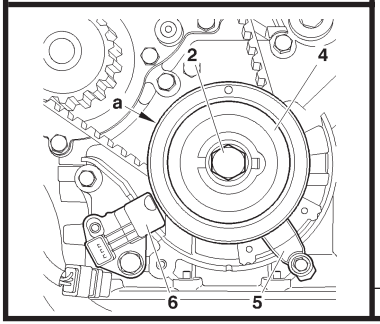

Engines: 8HX - 8HZ

Setting the timing.

Remove the upper timing cover **(1)**.
Rotate the engine by means of the crankshaft screw **(2)**.
NOTE: The pegging hole is located under the crankshaft bearing cap cover.
Peg the engine flywheel, using tool **[3]**.
Remove the lower timing cover **(3)**.
Uncouple the exhaust line from the manifold.

IMPERATIVE: Uncouple the exhaust line in order to avoid damaging the front flexible pipe. Twisting, pulling and bending the front flexible pipe reduces its life.
Remove:
- The engine speed sensor **(6)**.
- The belt retaining stop **(5)**.
- The screw **(2)**.
- The crankshaft pinion **(4)** *(with its magnetic track «**a**»)*.

IMPERATIVE: The magnetic track should show no signs of damage and should not be approached by any other source of magnetism. Should this not be adhered to, it is essential to replace the crankshaft pinion.

Refit the screw **(2)**.

B1BP2LXC	B1EP18GC

CHECKING AND SETTING THE VALVE TIMING

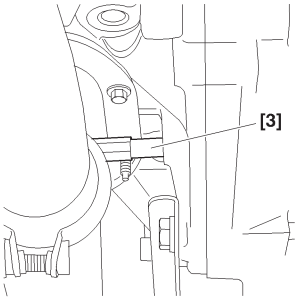

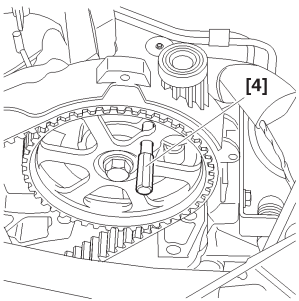

Engines: 8HX - 8HZ

Setting the timing (continued).

Remove the tool **[3]**.

Rotate the engine by means of the crankshaft pinion screw **(2)** *(clockwise)* to bring it to the pegging position.

Peg the camshaft pulley, using tool **[4]**.

Peg:
- The crankshaft pinion **(6)**, using tool **[5]**.
- The high pressure pump pinion, using tool **[5]**.

Support the engine with the aid of a roller jack equipped with a chock.

Remove:
- The RH engine support **(7)**.
- The intermediate engine support *(right hand side)* **(8)**.

B1JP03SC | B1EP18DC | B1EP195C | B1BP2LYC

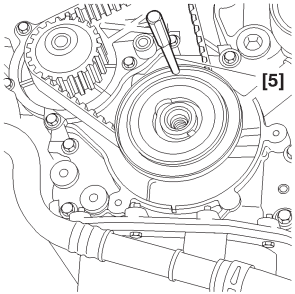

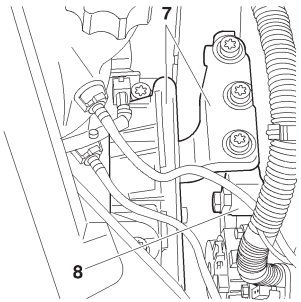

CHECKING AND SETTING THE VALVE TIMING

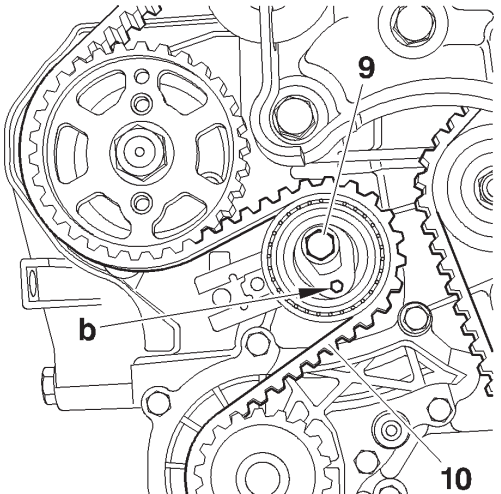

B1EP18HC

Engines: 8HX - 8HZ

Setting the timing (continued).

Hold the tensioner roller, using a hexagonal spanner at «**b**».
Slacken the screw **(9)**.
Remove the timing belt **(10)**.

Refitting.
IMPERATIVE: Check that both the tensioner roller and the fixed roller turn freely *(no tight spots).* If this is not the case, replace the rollers.
Fitting of the pulleys.
- Camshaft pulley : Tighten to **4,3 ± 0,4 m.daN**.
- Fuel high pressure pump pulley : Tighten to **5 ± 0,5 m.daN**.

The crankshaft pinion is located without a screw at the end of the crankshaft.

Fitting of the rollers.
IMPERATIVE: Check that the tensioner roller turns freely *(no tight spot).* Otherwise, replace the rollers.

- Guide roller : Tighten to **4,5 ± 0,4 m.daN.**
- Tensioner roller : Pre-tighten to **0,1 m.daN.**

Check the condition of the seals at the camshaft and at the crankshaft pinion.

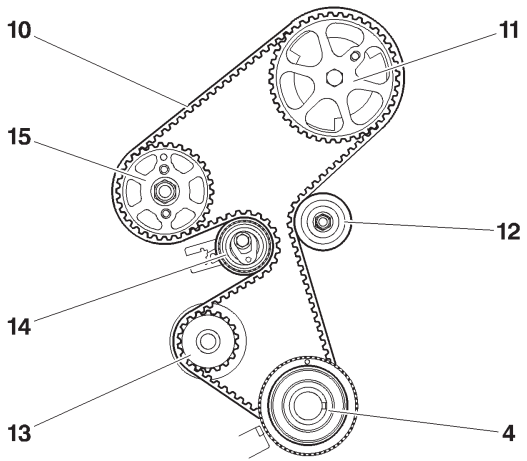

B1EP18JD

Engines: 8HX - 8HZ

Setting the timing (continued).

NOTE: Screw **(9)** slackened.

Position the timing belt **(10)** observing the following sequence:

- Crankshaft pinion **(4)**.

- Guide roller **(12)**.

- Camshaft pulley **(11)** *(check that the belt is held correctly against the roller)*.

- Coolant pump pinion **(13)**.

- Fuel high pressure pump pulley **(15)**.

- Tensioner roller **(14)**.

CHECKING AND SETTING THE VALVE TIMING

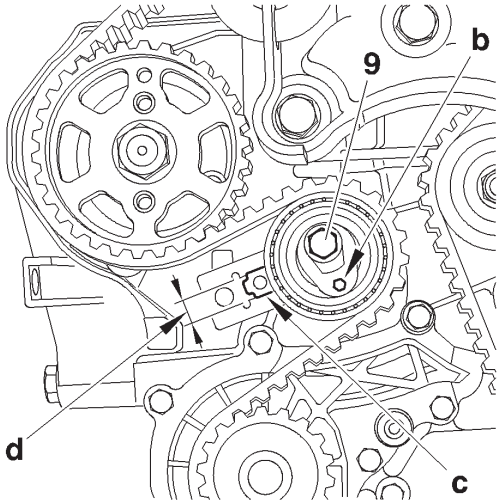

B1EP18KC

Engines: 8HX - 8HZ

Setting the timing (continued).

Turn the tensioner roller to the right to bring the index **«c»** to position **«d»**, using a hexagonal spanner.
Tighten the screw **(9)** of the tensioner roller, tighten to **3 ± 0,3 m.daN**.
Remove the tools **[4]** and **[5]**.

Rotate the engine ten times *(check that the timing pinion is correctly up against the crankshaft)*.

Check:
- The pegging of the camshaft.
- The crankshaft pinion.
- The fuel high pressure pump pinion **(15)**.
- The correct positioning of the index of the dynamic tensioner.

If these are not correct, repeat the operation to position the timing belt.

Refit:
- The engine speed sensor **(6)**.
- The belt retaining stop **(5)**, tighten to **0,7 m.daN**.

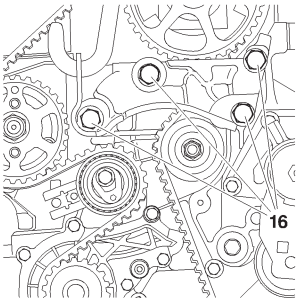

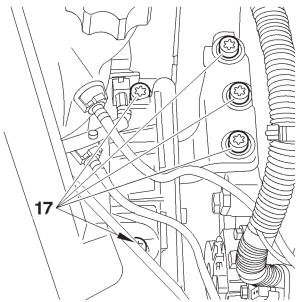

Engines: 8HX - 8HZ

Setting the timing (continued).

Refit:

- The intermediate RH engine support, tighten the screws **(16)** to **5,5 ± 0,5 m.daN**.
- The RH engine support, tighten the screws **(17)** to **4,5 ± 0,4 m.daN**.
- The bottom timing cover **(3)**.

Immobilise the engine flywheel, using tool **[3]**.
Remove the screw **(2)**.
Refit the accessories drive pulley and tighten to:

Pre-tighten to	: **3 ± 0,3 m.daN**.
Angular tighten to	**: 180° ± 1,8°**.

Remove tool **[3]**.
Refit:
- The top cover **(1)**.
- The accessories belt *(see corresponding operation)*.
- The exhaust line *(see corresponding operation)*.
- The front RH splash-shield.
- The front RH wheel.

B1EP18LC | **B1BP2LZC**

C3	CHECKING AND SETTING THE VALVE TIMING

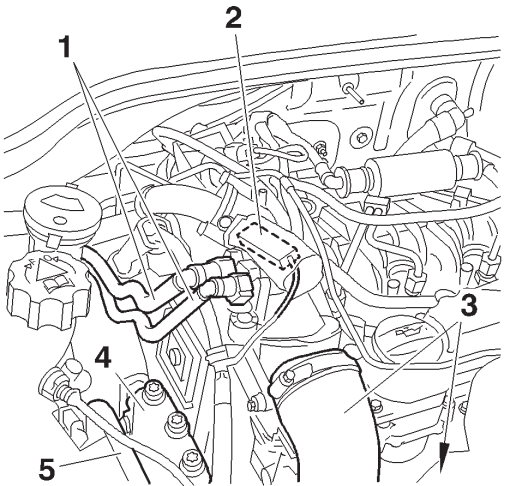

B1BP2N0C

Engine: 8HY

Tools.

[1] Engine flywheel peg **Ø 12 mm**	**: (-).0194-C**
[2] Camshaft pulley peg **Ø 8 mm**	**: (-).0194-B**
[3] Crankshaft pulley peg **Ø 5 mm**	**: (-).0194-A**

Preliminary operations.

Remove:
- The front RH wheel.
- The front RH splash-shield.
- The accessories belt *(see corresponding operation)*.

Uncouple:
- The supply unions **(1)**.
- The air/air heat exchanger inlet/outlet pipes **(3)**.
- The exhaust line *(at the flexible pipe)*.

Disconnect the connector **(2)**.

Support the engine by means of a roller jack equipped with a chock.

Remove the engine supports **(4)** and **(5)**.

CHECKING AND SETTING THE VALVE TIMING

C3

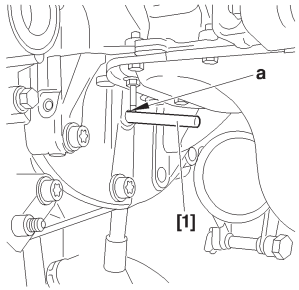

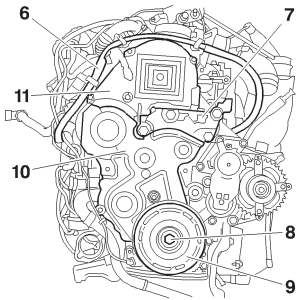

Engine: 8HY

Checks.

Rotate the engine to engage it *(normal direction of rotation)*.
Immobilise the engine flywheel at **«a»**, using tool **[1]**.
Move aside the harness **(6)**.

Remove:

- The engine support **(7)**.

- The screw **(8)**.

- The pulley **(9)**.

- The lower timing cover **(10)**.

- The upper timing cover **(11)**.

- The tool **[1]**.

B1BP2N1C	B1BP2N2C

C3	CHECKING AND SETTING THE VALVE TIMING

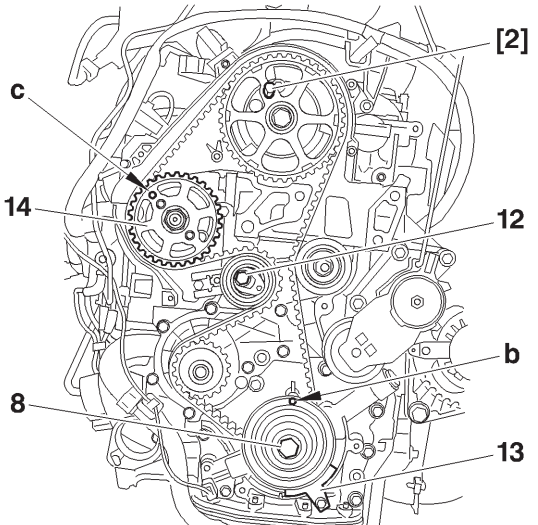

B1EP18YD

Engine: 8HY

Checks (continued).

Refit the screw **(8)**.
Rotate the crankshaft **six** times *(clockwise)*.

IMPERATIVE: Never rotate the engine backwards.

Peg:
- The camshaft, using tool **[2]** *(oil the pegs)*.
- The fuel high pressure pump pulley **(14)**, using tool **[3]** at «**c**».

WARNING: The magnetic track should show no signs of damage and should not be approached by any source of magnetism.

Peg the crankshaft at «**b**», using tool **[3]**.

IMPERATIVE: Should it be impossible to peg the camshaft, check that the offset between the hole in the camshaft pinion and the pegging hole is not greater than 1 mm.

Otherwise repeat the operation to position the timing belt *(see corresponding operation)*.

Engine: 8HY

B1EP18ZC

Checks (continued).

NOTE: The index «**e**» of the dynamic tensioner roller should be centred within the area «**d**».

Check the correct positioning of the index «**e**».

If it is not correct, repeat the operation to tension the timing belt *(see corresponding operation)*.

Refitting.

Refit the tool **[1]** at «**a**».

Remove the screw **(8)**.

Refit:
- The upper timing cover **(11)**.
- The lower timing cover **(10)**.
- The accessories drive pulley **(9)**.
- The screw **(8)**.

Tightening:
- Screw **(8)**:

Pre-tighten to	: **3 ± 0,3 m.daN**.
Angular tightening	: **180° ± 5°**.

Remove the tool **[1]**.

C3	CHECKING AND SETTING THE VALVE TIMING

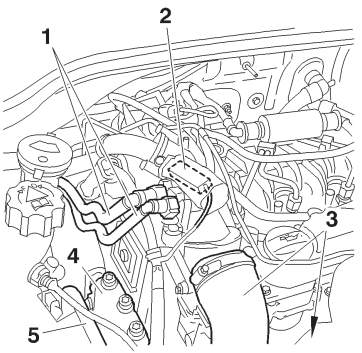

B1BP2N0C

Engine: 8HY

Checks (continued).

Refit:
- The engine support **(7)**, tighten to **1,5 ± 0,4 m.daN**.
- The engine support **(4)**, tighten to **6,1 ± 0,6 m.daN**.
- The engine support **(5)**, tighten to **6 ± 0,6 m.daN**.
- The electrical harness **(6)**.

Couple:
- The exhaust line, tighten the collar to **2,5 ± 0,3 m.daN**.
- The fuel supply unions **(1)**.
- The air/air heat exchanger inlet/outlet pipes **(3)**.

Connect the connector **(2)**.

Refit:
- The accessories belt *(see corresponding operation)*.
- The front RH splash-shield *(see corresponding operation)*.
- The front RH road wheel, tighten to **9 ± 1 m.daN**.

Reconnect the battery.

Engine: 8HY

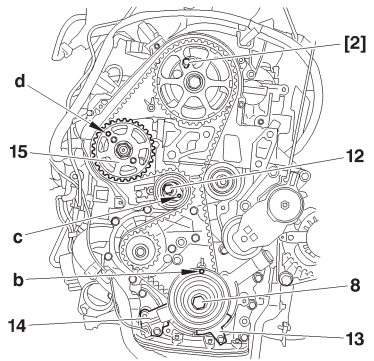

B1EP18VD

Setting the timing.

Perform the preliminary operations for checking the timing up to removing tool **[1]** at **«a»** for immobiling the engine flywheel.
Refit screw **(8)**.
Rotate the crankshaft to bring the camshaft towards its pegging point.
Peg the camshaft, using tool **[2]** *(oil the pegs)*.

WARNING: Do not press or damage the track which is the target for the engine speed sensor (14).

Peg the crankshaft at **«b»**, using tool **[3]**.
Remove:
- The timing protector **(13)**.
- The engine speed sensor **(14)**.

Slacken the screw **(12)** of the tensioner roller, keeping it slack with the aid of a hexagonal spanner at **«c»**.
Detension the belt by pivoting the tensioner roller *(clockwise)*.
Remove the timing belt, commencing with the coolant pump pinion.
Peg the pulley **(15)**, using a **5 mm** diameter peg at **«d»**.

C3	CHECKING AND SETTING THE VALVE TIMING

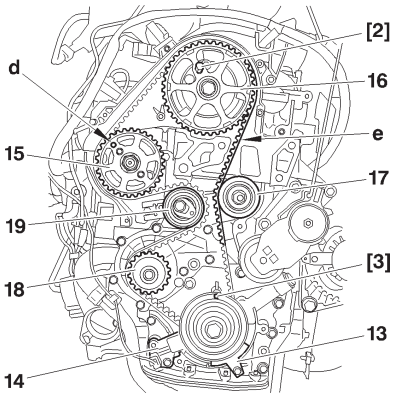

B1EP18WD

Engine: 8HY

Setting the timing (continued).

Checking the setting.

IMPERATIVE: Just prior to refitting, carry out the following tests.

Check that:
- The rollers and the coolant pump operate freely *(no play and no tight spot)*.
- There are no traces of oil *(from the crankshaft and camshaft sealing rings)*.
- There is no leak of coolant fluid *(from the coolant pump)*.
- The target track of the engine speed sensor **(14)** is not damaged or scratched *(if necessary replace the defective components)*.

Refitting.
Fit the timing belt on the crankshaft pinion.
Position the belt on the guide roller, with the belt well tensioned.
Refit:
- The timing protector **(13)**.
- The sensor **(14)**.

Engine: 8HY

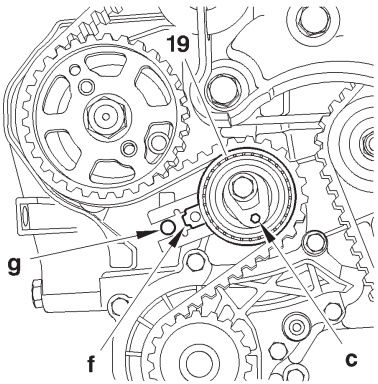

B1EP18XC

Setting the timing (continued).

Checks (continued).

Reposition the timing belt, belt at «**e**» well tensioned, in the following order:
- Guide roller **(17)**.
- Camshaft pulley **(16)**.
- Fuel high pressure pump pulley **(15)**.
- Coolant pump pinion **(18)**.
- Tensioner roller **(19)**.

Remove the **5 mm** diameter peg at «**d**».
Adjusting the fitting tension of the belt.
Action the tensioner roller **(19)** to align the marks «**f**» and «**g**», avoiding detensioning the timing belt, with the aid of a male hexagonal spanner at «**c**».
If this is not successful, repeat the operation to tension the belt.
Hold the tensioner roller in position **(19)**.
Tighten the tensioner roller, tightening to **3,7 ± 0,3 m.daN**.
Check the position of the tensioner roller *(the alignment of the marks «**f**» and «**g**» should be correct)*.
Remove tools **[2]** and **[3]**.
Turn the crankshaft **six** rotations *(clockwise)*.

C3

CHECKING AND SETTING THE VALVE TIMING

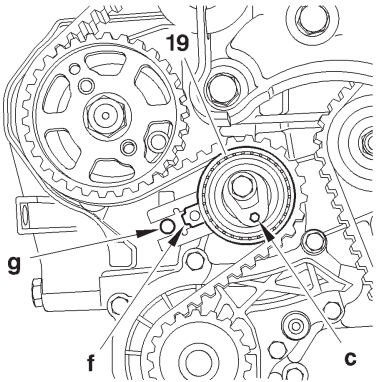

B1EP18XC

Engine: 8HY

Adjusting the timing belt tension (continued).

IMPERATIVE: Never rotate the engine backwards.

WARNING: Do not touch or damage the track of the target of the engine speed sensor (14).

Peg the crankshaft, using tool **[3]**.

Check the position of the tensioner roller *(the alignment of the marks «f» and «g» should be correct)*.

If this is not the case, repeat the operation to tension the belt.

Peg the camshaft pulley, using tool **[2]**.

IMPERATIVE: Should it be impossible to peg the camshaft, check that the offset between the camshaft hole and the pegging hole is not more than 1 mm. If the offset is too great, repeat the operation.

Remove the pegs **[2]** and **[3]**.

Refit tool **[1]** at **«a»**.

Remove the screw **(8)**.

Complete the refitting.

CHECKING THE VALVE TIMING

C3

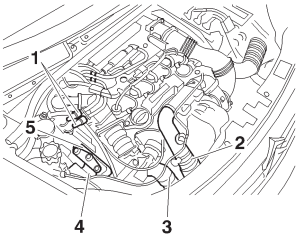

B1BP3AMC

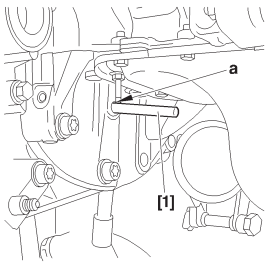

B1BP2N1C

Engine: 9HX

Tools.

[1] Flywheel setting peg **: (-).0194.C**
[2] Camshaft setting peg **: (-).0194.B**
[3] Crankshaft setting peg **: (-).0194.A**

IMPERATIVE: Respect the safety and cleanliness requirements specific to High pressure Diesel injection (HDi) engine versions.

Checking the timing.

Raise and support the vehicle, wheels hanging.
Disconnect the battery.
Remove:
- The front RH wheel.
- The front RH splash-shield.
- The accessories drive belt *(see corresponding operation)*.

Remove the engine supports **(4)** and **(5)**.
Uncouple:
- The fuel supply unions **(1)**.
- The air/air heat exchanger inlet **(2)** and outlet **(3)** pipes.
- The exhaust line *(at the flexible pipe)*.

Support the engine with a roller jack equipped with a block.
Turn the engine in its normal direction of rotation.
Peg the flywheel, using the peg **[1]** *(at **"a"**)*.

C3	CHECKING THE VALVE TIMING

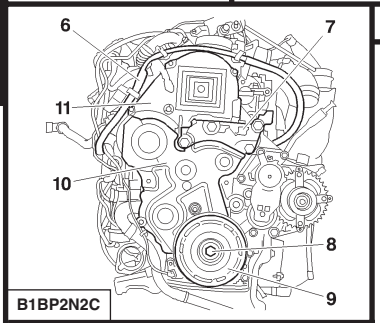

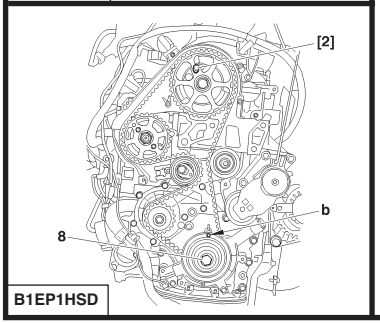

Engine: 9HX

Move aside the harness **(6)**.
Remove:
- The engine support **(7)**.
- The screw **(8)**.
- The accessories drive pulley **(9)**.
- The lower timing cover **(10)**.
- The upper timing cover **(11)**.
- The tool **[1]**.

Refit the screw **(8)**.
Rotate the crankshaft **six** times clockwise.

IMPERATIVE: Never turn it backwards.
Peg the camshaft using tool [2] *(oil the peg)*.

WARNING: The magnetic track should not show any sign of damage and should not be approached by any other magnetic source.
Peg the crankshaft using tool **[3]** at **«b»**.

ESSENTIAL: Should it not be possible to peg the camshaft, check that the offset between the camshaft pinion hole and the pegging hole is not more than 1 mm. If it is more, repeat the operation to position the timing belt *(see corresponding operation)*.

CHECKING THE VALVE TIMING

C3

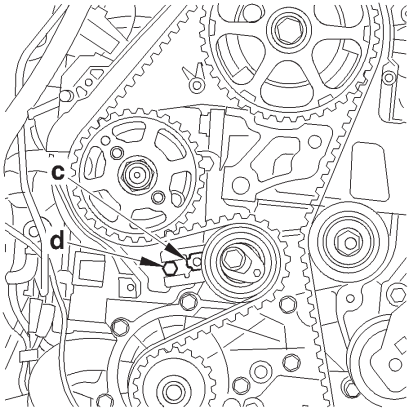

B1EP1HTC

Engine: 9HX

Note: The index **«c»** of the dynamic tensioner roller should be centred in the interval **«d»**.
Check the correct positioning of the index **«c»**.
If it is not correct, repeat the operation to tension the timing belt *(see corresponding operation)*.
Remove tools **[2]** and **[3]**.

Refitting.
Proceed in reverse order.

Tightening torques.

Method for tightening the screw **(8)**:
- Pre-tightening : **3 ± 0,3 m.daN.**
- Angular tightening : **180° ± 5°**.

Engine support **(7)** tighten to	**: 1,5 ± 0,4 m.daN.**
Engine support **(4)** tighten to	**: 6,1 ± 0,6 m.daN.**
Engine support **(5)** tighten to	**: 6 ± 0,6 m.daN.**
Exhaust line clip: tighten to	**: 2,5 ± 0,3 m.daN.**
Front RH wheel: tighten to	**: 9 ± 1 m.daN.**

IMPERATIVE: Perform the operations that are necessary following a reconnection of the battery *(see corresponding operation)*.

C3	CHECKING AND SETTING THE VALVE TIMING

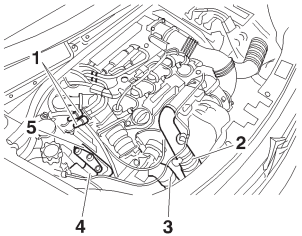

B1BP3AMC

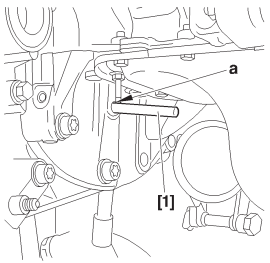

B1BP2N1C

Engine: 9HX

	Tools.
[1] Flywheel setting peg	**: (-).0194.C**
[2] Camshaft setting peg	**: (-).0194.B**
[3] Crankshaft setting peg	**: (-).0194.A**

IMPERATIVE: Respect the safety and cleanliness requirements specific to High pressure Diesel injection (HDi) engine versions.

Checking the timing.

Raise and support the vehicle, wheels hanging.
Disconnect the battery.
Remove:
- The front RH wheel.
- The front RH splash-shield.
- The accessories drive belt *(see corresponding operation)*.

Remove the engine supports **(4)** and **(5)**.
Uncouple:
- The fuel supply unions **(1)**.
- The air/air heat exchanger inlet **(2)** and outlet **(3)** pipes.
- The exhaust line *(at the flexible pipe)*.

Support the engine with a roller jack equipped with a block.
Turn the engine in its normal direction of rotation.
Peg the flywheel, using the peg **[1]** *(at **"a"**)*.

CHECKING AND SETTING THE VALVE TIMING

C3

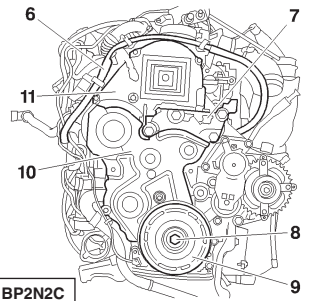

B1BP2N2C

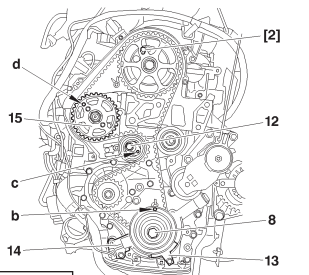

B1EP18VD

Engine: 9HX

Move aside the harness **(6)**.
Remove:
- The engine support **(7)**.
- The screw **(8)**.
- The accessories drive pulley **(9)**.
- The lower timing cover **(10)**.
- The upper timing cover **(11)**.
- The tool **[1]**.

Refit the screw **(8)**.
Rotate the crankshaft to bring the camshaft towards its pegging point.
Peg the camshaft, using tool **[2]** *(oil the peg)*.

WARNING: Do not press or damage the track of the engine speed sensor target (14).
Use tool **[3]** to peg the crankshaft at **«b»**.
Remove:
- The timing belt protector **(13)**.
- The engine speed sensor **(14)**.

Slacken the screw **(12)** of the tensioner roller, and keep it slackened using an allen spanner at **«c»**.
Detension the timing belt by pivoting the tensioner roller *(clockwise)*.
Remove the timing belt, starting with the coolant pump pinion.

C3	CHECKING AND SETTING THE VALVE TIMING

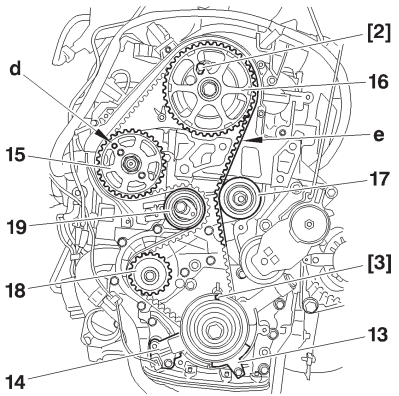

B1EP18WD

Engine: 9HX

Checks.

ESSENTIAL: Just prior to refitting, proceed to the checks as below.

Check:

- That the rollers and the coolant pump pulley turn freely *(without play and without tight spot)*.
- That there are no signs of oil leaks *(at the crankshaft and camshaft seals)*.
- That there are no leaks of coolant fluid *(at the coolant pump)*.
- That the track of the engine speed sensor target **(14)** is not damaged or scratched.

Replace any components that are defective *(if necessary)*.

Refitting.

Fit the timing belt on the crankshaft pulley.

Position the belt on the guide roller, belt well tensioned.

Refit:

- the timing belt protector **(13)**.
- the engine speed sensor **(14)**.

Reposition the timing belt, strip **«e»** well tensioned, in the following sequence:

Guide roller **(17)**, camshaft pulley **(16)**, fuel high pressure pump pulley **(15)**, coolant pump pulley **(18)**, tensioner roller **(19)**.

Engine: 9HX

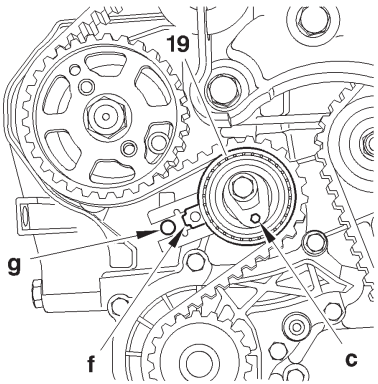

B1EP18XC

Adjusting the timing belt tension.

Act on the tensioner roller **(19)** to align the marks **«f»** and **«g»**, avoiding detensioning the timing belt, using an allen spanner at **«c»**.
Should this fail, repeat the operation to tension the timing belt.
Hold the tensioner roller **(19)**.
Tighten the tensioner roller fixing nut to **3,7 ± 0,3 m.daN**.
Check the position of the tensioner roller *(the alignment of the marks «f» and «g» should be correct)*.
Remove tools **[2]** and **[3]**.
Rotate the crankshaft **six times** clockwise.

IMPERATIVE: Never rotate the engine backwards.

WARNING: Do not touch or damage the track of the target of the engine speed sensor (14).

Peg the crankshaft, using tool **[3]**.
Check the position of the tensioner roller *(the alignment of the marks «f» and «g» should be correct)*.
If this is not the case, repeat the operation to tension the timing belt.
Peg the camshaft pulley, using tool **[2]**.

C3	CHECKING AND SETTING THE VALVE TIMING

Engine: 9HX

ESSENTIAL: Should it not be possible to peg the camshaft, check that the offset between the camshaft pinion hole and the pegging hole is not more than 1 mm. If it is more, repeat the operation to position the timing belt *(see corresponding operation)*.

Remove tools **[2]** and **[3]**.
Refit tool **[1]** at «**a**».
Remove the screw **(8)**.
Refit:
- The upper timing cover **(11)**.
- The lower timing cover **(10)**.
- The pulley **(9)**.
- The screw **(8)**.

Method for tightening the screw **(8)**:
- Pre-tighten to **3 ± 0,3 m.daN**.
- Angular tighten 1**80° ± 5°.**
- Remove tool **[1]**.

Refit:
- The engine support **(7)**, tighten to **5,7 ± 0,9 m.daN**.
- The engine support **(4)**, tighten to **6,1 ± 0,8 m.daN**.
- The engine support **(5)**, tighten to **6 ± 0,6 m.daN**.

- The electrical harness **(6)**.

Disengage the jack from under the engine.

Complete the refitting.

IMPERATIVE: Perform the operations that are necessary following a reconnection of the battery *(see corresponding operation)*.

CHECKING THE OIL PRESSURE

	Petrol				Diesel			
Engines	**TU1JP**	**TU3JP**	**ET3J4**	**TU5 JP4/JP4S**	**DV4TD**		**DV4TED4**	**DV6ATED4**
Temperature (°C)	90°							80°
Pressure (bars)					1,3			
Rpm					1000			
Pressure (bars)	3							
Rpm	2000							
Pressure (bars)								
Rpm								
Pressure (bars)	4				3,5			
Rpm	4000							
	Tools (Toolkit 4103)							
2279-T.Bis	X	X	X	X	X	X	X	X
4103-T	X	X	X	X	X	X	X	X
(-).1503.J					X	X	X	X
7001-T	X	X	X	X				

NOTE: The oil pressure should be checked with the engine hot, after the oil level has been checked.

VALVE CLEARANCE SETTINGS

The valve clearances must be checked with the engine cold

	● Inlet	⊗ Exhaust
TU1JP **TU3JP**	0,20 mm ± 0,05	0,40 mm ± 0,05
TU5JP4/JP4S	1 mm ± 0,05	1 mm ± 0,05
ET3J4 **DV4TD - DV4TED4** **DV6ATED4**	Hydraulic adjustment	

POSSIBLE PROCEDURES
For engines with 4 cylinders in a line (1-3-4-2)

Rocking

Rocking	Adjust
1 ● ⊗ 1	4 ● ⊗ 4
3 ● ⊗ 3	2 ● ⊗ 2
4 ● ⊗ 4	1 ● ⊗ 1
2 ● ⊗ 2	3 ● ⊗ 3

⊗ Inlet

● Exhaust

Fully open (Exhaust)

Valves fully open	Adjust
⊗ 1	3 ● ⊗ 4
⊗ 3	4 ● ⊗ 2
⊗ 4	2 ● ⊗ 1
⊗ 2	1 ● ⊗ 3

Engines without hydraulic adjustment: the clearance **(J)** should be checked opposite the cam.

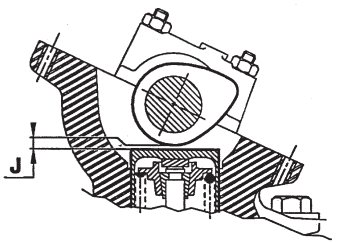

B1DP13QC

SPEEDOMETER

An E.E.C. **decree of 25 June 1976**, regulates the speed displayed by the speedmeter in relation to the actual speed travelled.

This decree stipulates:

- The speed indicated by a speedometer must never be lower than the actual vehicle speed.
- Between the speed displayed «**SD**» and the speed travelled «**ST**», there must always be the following relationship:

ST < SD < 1.10 ST + 4 Kph

Example: For an actual speed of **100 Kph** the speed displayed by the speedometer may be between **100** and **114 Kph**.
The speed indicated by the speedometer may be influenced by:

- The speedometer.
- The tyres fitted to the vehicle.
- The final drive ratio.
- The speedometer drive ratio.

Any of these components can be checked without removing them from the vehicle *(see information note **N° 78-85 TT of 19 October 1978**)*.

NOTE: Before replacing the speedometer, check the conformity of the following points:

- The tyres fitted to the vehicle.
- The gearbox final drive ratio.
- The speedometer drive ratio.

C2	CLUTCH SPECIFICATIONS					
	TU1JP	TU3JP	TU5JP4	TU5JP4S	DV4TD	
Engine type	**HFX**	**KFV**	**NFU**	**NFS**	**8HX**	**8HZ**
Gearbox	BVM (*)	BVM/BVMP (**)	BVM/BVMP (**)	BVM (*)	BVM/BVMP (**)	
	MA 5/S	MA 5 N/L	MA 5 S/L	MA 5 S	MA 5/0	
Make	VALEO		LUK			
Mechanism/type	180 CP0 3400		200 P 3900	200 CPX 3850	200 P 3900	
Clutch disc	11 R 10					
Ext./int. lining Ø	180/127		200/134			
Disc lining type	408					

(*) : **BVM** = Manual gearbox..

(**) : **BVMP** = Piloted manual gearbox.

CLUTCH SPECIFICATIONS								C3 - C3 PLURIEL
	TU1JP	TU3JP	ET3J4	TU5JP4	DV4TD		DV4TED4	DV6ATED4
Engine type	HFX	KFV	KFU	NFU	8HX	8HZ	8HY	9HX
Gearbox	MA/5		MA/5S MAP	MA/5N	MA/5O		BE4/5L	BE4R/5L
Make	VALEO		SACHS	LUK				
Mechanism/type	180 CPO 3400		200 MF 3850	200 P 3900		230 P 4700		235 P 4800
Clutch disc	11 R 10 X							
Ext./int. lining Ø	180/127		200/134	200/134		228/155		235/165
Disc lining type	F408		810 DS	F 408				810 DS

CLUTCH SPECIFICATIONS

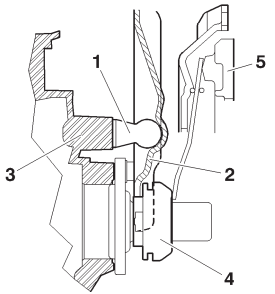

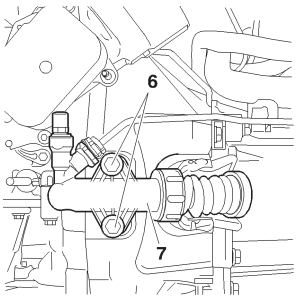

NOTE: All the clutches are **«push»** type with hydraulic control.

Description.

The declutch control has a declutch fork mounted on a ball-joint.
(1) The ball-joint is screwed into the clutch casing
(2) Declutch fork
(3) Clutch casing
(4) Bearing
(5) Clutch plate

The clutch control slave cylinder **(7)** is fixed by two screws **(6)** onto the exterior of the clutch casing.

Tightening torques (m.daN).

- Fixing of clutch plate / engine flywheel	**: 2 ± 0,2**
- Fixing of clutch control slave cylinder / clutch housing	**: 2 ± 0,25**
- Fixing of engine flywheel / crankshaft	
Pre-tightening	**: 1,7 ± 0,1**
Angular tightening	**: 70° ± 5°**

B2BP047C B2BP04QC

SPECIAL FEATURES: CLUTCH TIGHTENING TORQUES

C3

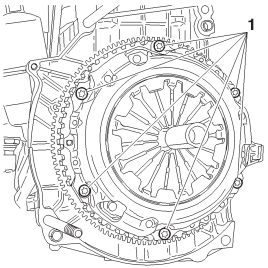

B2BP06DC

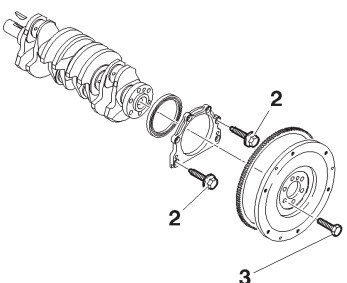

B1DP1LXC

Clutch		
1	**Screws for clutch plate / flywheel**	**2 ± 0,2**
2	**Screw for gasket plate at flywheel end / crankshaft (TU and ET3 engines)**	**6,7 ± 0,6**
3	**Flywheel / crankshaft (DV engine)** Pre-tightening Angular tightening	 **1,7 ± 0,2** **70° ± 5°**

Sequence for tightening the flywheel screws

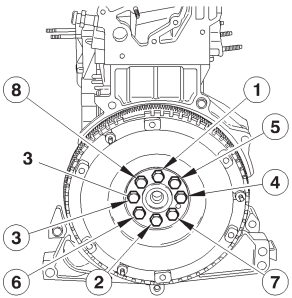

B1CP0H9C

CLUTCH
GEARBOX
TRANSMISSION

HYDRAULIC CLUTCH CONTROL: CHECKS AND ADJUSTMENTS

Bleeding the hydraulic clutch control

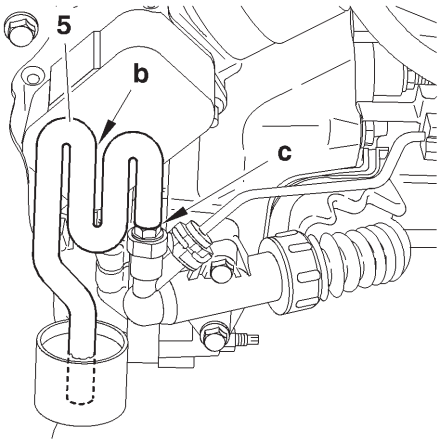

B2BP04XC

IMPERATIVE: Use only new brake brake fluid that is not emulsified, avoid any ingress of impurities into the hydraulic circuit.

IMPERATIVE: Do not use automatic bleeding equipment *(risk of the brake fluid emulsifying in the hydraulic circuit).*

Couple a transparent tube **(5)** on the bleed screw at **«c»**.

Submerge the end of the tube **(5)** in the recipient containing the brake fluid, located below the level of the clutch slave cylinder.

Use the transparent tube **(5)** to act as a siphon at **«b»**.

WARNING: the end of the tube (5) must be submerged in the brake fluid.

Open the bleed screw, at **«c»**.

Bleeding the hydraulic clutch control

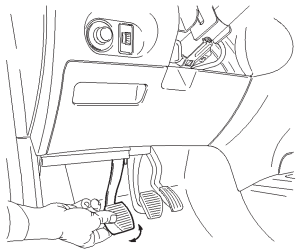

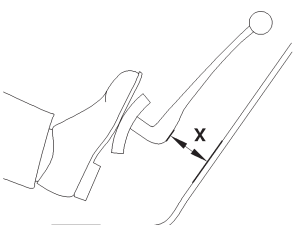

Action the clutch pedal manually through its full travel: **7 times** rapidly down and up.
Allow the clutch pedal to come back up to its high position.
Fill the brake fluid reservoir to the maximum of its capacity.
Open the bleed screw at «C».
Action the clutch pedal manually through its entire travel: **7 times** rapidly down and up.
The last time, keep the clutch pedal fully down.
Reclose the bleed screw, at «C».
If necessary, repeat the operation.
Top up the brake fluid to the **MAX. level** of the brake fluid reservoir.
Work the clutch vigorously **40 times**.
Start the engine.
Apply the handbrake.
Engage a gear.
Check that the clutch starts to engage at a dimension **(X)** greater than or equal to **45 mm** *(the dimension **(X)** is given as a guide)*.
Repeat the bleed operations if necessary.

C5FP0FQC | B2BP04YC

MA MANUAL GEARBOX SPECIFICATIONS

Vehicle	Engine	Gearbox type	Sequence	Torque ratio	Drive ratio
C2	TU1JP	MA/5S (1)	20 CQ 12	16x65	21x18
	TU3JP	MA/5N (2)	20 CQ 13		
		MA/5L (4)	20 CQ 10	14x60	
	TU5JP4	MA/5S (1) MAP (5)	20 CP 64	16x63	
		MA/5S (1)	20 CQ 22		None
		MA/5L (4)	20 CP 66	14x60	
	TU5JP4S	MA/5S (1)	20 CQ 21	14x60	
	ET3J4		20 CQ 31	17x64	
	DV4TD	MA/50 (3)	20 CQ 03	17x61	21x18
		MA/50 MAP (5)	20 CQ 02	16x63	None
C3 Pluriel	TU3JP	MA/5N (2)	20 CQ 19	13x59	21x17
	TU5JP4	MA/5N (2) MAP (5)	20 CP 63	16x65	None
	DV4TD	MA/50 (3)	20 CQ 04	14x60	

(1) 5S = Sport stepping (2) 5N = Normal stepping (3) = 50 Stepping specific to DV engine (4) 5L= Open stepping
(5) = MAP piloted gearbox

MA MANUAL GEARBOX SPECIFICATIONS

Vehicle	Engine	Gearbox type	Sequence	Torque ratio	Drive ratio
C3	TU1A	MA/5N (2)	20 CQ 08	14x60	21x18
		MA/5N (2) et (6)	20 CQ 09	16x63	
	TU1JP	MA/5N (2)	20 CQ 08	14x60	
			20 CQ 11	13x61	
		MA/5N (2) et (6)	20 CQ 09	13x63	
	TU3JP	MA/5N (2) et (6)	20 CQ 09	16x63	
		MA/5L (4)	20 CQ 10	14x60	
	TU5JP4	MA/5S (1)	20 CQ 18	17x64	None
		MA/5L (4)	20 CQ 20	14x60	
		MA/5S (1)	20 CP 56	17x64	
	ET3J4	MA/5S (1)	20 CP 56	17x64	
	DV4TD	MA/50 (3) et MAP (5)	20 CQ 02	16x63	21x18
		MA/50 (3)	20 CQ 03	17x61	
		MA/50 (3) et (6)	20 CQ 05	16x65	None

(1) 5S = Sport stepping (2) 5N = Normal stepping (3) = 50 Stepping specific to DV engine (4) 5L= Open stepping
(5) = MAP piloted gearbox (6) = Brio

BE4 MANUAL GEARBOX SPECIFICATIONS

Vehicle	Engine	Gearbox type	Sequence	Torque ratio	Drive ratio
C3	DV4TED4	BE4/5	20 DM 25	17x61	None
			20 DM 26	19x77	
	DAD	BE4/5N	20 DM 44	17x76	22x19
	DV6ATED4	BE4/5L	20 DM 84	17x61	None

AL4 AUTOMATIC GEARBOX SPECIFICATIONS

Vehicle	Engine	Gearbox type	Sequence	Torque ratio	Descent ratio
C3	TU3JP	AL4	20 TP 65	23x73	52x67
			20 TP 75		

MA/5 GEARBOX: TIGHTENING TORQUES

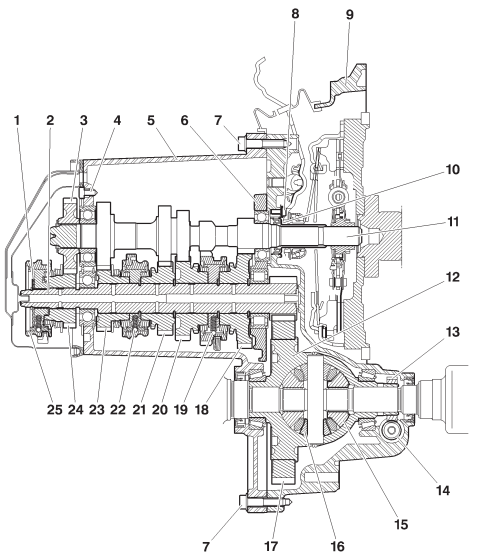

B2CP3SRP

Tightening torques (m.daN).			
Ref.	**Description**	**Number of screws**	**Tightening**
1	**Bearing retaining clip**	4	**1,8 ± 0,2**
2	**Intermediate plate**	11	**5 ± 0,5**
3	**Gearbox casing**	16 **➔ RPO 9784**	**1,9 ± 0,2**
		17 **RPO 9786 ➔**	
4	**Clutch bearing guide screw**	3	**0,6 ± 0,15**

MA/5 GEARBOX: TIGHTENING TORQUES

C2 - C3 - C3 PLURIEL

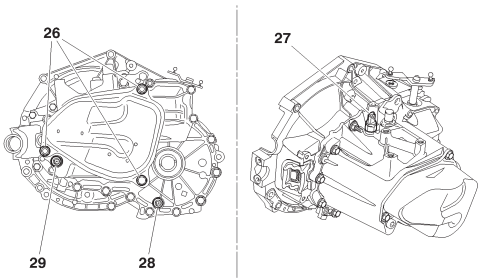

B2CP3SSD

Tightening torques (m.daN).			
Ref.	Description	Number of screws	Tightening
26	5th gear cover fixing screw	3	2,2 ± 0,2
27	Reverse gear switch	2,5 ± 0,5	
28	Drain plug	1	3,3 ± 0,3
29	Top-up plug	3,3 ± 0,3	

Safety requirements

ESSENTIAL: Given the special features of the MA type piloted manual gearbox, observe the requirements detailed below.

IMPERATIVE: Always disconnect the battery negative terminal before operating on the actuators.

NOTE: After disconnecting the battery, never try to remove the clutch actuator on the vehicle before having checked that it is in the closed position *(rod pushed in)*.

IMPERATIVE: After Sales checks done with the engine running must be performed with «Neutral» engaged and the handbrake on *(unless there is a clear mention otherwise in the repair procedures).*

IMPERATIVE: The areas of movement of the clutch fork and of the gear engagement lever must always be kept free during the actuator operating phases.

IMPERATIVE: When initialising the clutch actuator and/or gearbox actuator, do not allow any person to walk or stand in front of the vehicle.

WARNING: When the engine is running, it is forbidden to perform repairs on the clutch and gearbox actuators on the vehicle *(whether manually or using a diagnostic tool).*

WARNING: Each time the driver's door is opened and each time the igntion is switched on, the gearbox ECU prompts the initialising of the clutch and gearbox actuators *(there is movement of the clutch fork and of the gear lever).*

WARNING: Whether the ignition is switched on or not, an action on the gear selector causes the clutch fork and the gear engagement lever to move on the gearbox.

Operations on electrical components:
Do not disconnect:
- The battery when the engine is running.
- The ECU with the ignition switched on.
- The clutch and gearbox actuators with the ignition switched on.

When carrying out electrical checks:
- The battery must be correctly charged.
- Never use a voltage source higher than **16V**.
- Never use a lamp to supply an actuator directly.

Before disconnecting connector, check:
- The condition of the various contacts *(for deformation, corrosion etc.)*
- The presence and the status of the mechanical unlocking.

Driving the vehicle.

IMPERATIVE: Never move the vehicle with the ignition switched off.

Never push the vehicle to attempt to start it *(impossible with a piloted manual gearbox).*

Towing.

Conditions for towing.

It is necessary to lift the front of the vehicle to tow it, after having positioned the gear lever in neutral. If there is a gearbox fault or malfunction, the vehicle can remain immobilised depending on the seriousness of the fault.

If a gear is engaged, the conditions for immobilisation of the vehicle are:
- Engine stopped *(the engine should not be started).*
- The clutch is open *(clutched).*

In these conditions are met, you can lift the front of the vehicle to tow it.

If it should not be possibe to lift the front of the vehicle, there are ways to unblock it:

- Engage **«N»**, using a diagnostic tool.
- Engage **«N»**, without using a diagnostic tool.

Engaging of «N», using a diagnostic tool.

Preliminary operations:
- Battery voltage higher than **12.5 volts**.
- Ignition switched on.
- Connect the diagnostic tool to the vehicle's diagnostic socket.

From the diagnostic tool menus, select:

- **«DIAGNOSIS»**
- MA type piloted manual gearbox.
- Actuator test.
- Gearbox actuator test.
- Gear engagement test.
- **N** *(neutral)*.

NOTE: The letter **«N»** should appear on the instrument panel.
If not, see the following solution:
- Engaging of **«N»**, without using a diagnostic tool.

Engaging of «N», without using a diagnostic tool.

In this configuration, the gearbox actuator is blocked, gear engaged.

NOTE: This recovery solution is to be used solely in a case where the attempt to make the gearbox actuator engage b via the diagnostic tool has failed.

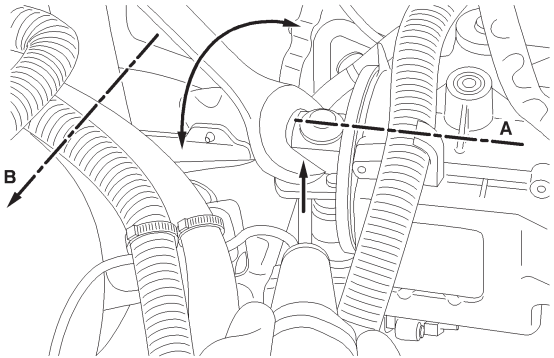

B2CP3L8D

Engaging of «N», without using a diagnostic tool (continued).

Preliminary operation:

- Disconnect the battery negative terminal.

- Remove the air filter.

- Use a **22 mm** spanner.

Use the spanner to lift the gear engagement lever the maximum possible until the axis **«A»** of the engagement lever is perpendicular to the axis **«B»** (*mid point of the gear engagement lever)*.

When this position is attained, position **«N»** is engaged.

MA PILOTED MANUAL GEARBOX: TIGHTENING TORQUES

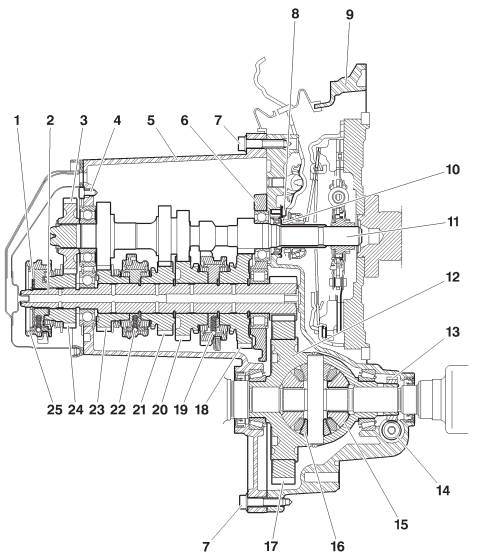

B2CP3SRP

Tightening torques (m.daN).			
Ref.	**Description**	**Number of screws**	**Tightening**
4	**Vis de Bearing retaining clip**	4	**1,8 ± 0,2**
6	**Intermediate plate**	11	**5 ± 0,5**
7	**Gearbox casing**	15	**1,9 ± 0,2**
8	**Clutch bearing guide screw**	3	**0,6 ± 0,15**

MA PILOTED MANUAL GEARBOX: TIGHTENING TORQUES

C2 - C3

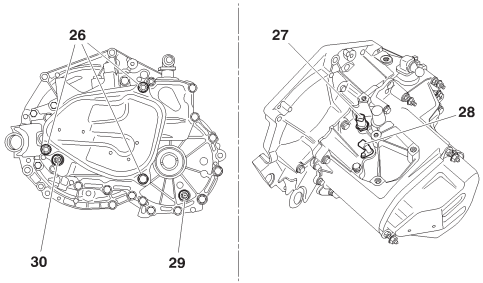

B2CP3VTD

Tightening torques (m.daN).			
Ref.	Description	Number of screws	Tightening
26	5th gear cover fixing screw	3	2,2 ± 0,2
27	Gearbox input speed sensor	1	0,8 ± 0,2
28	Reverse gear switch		2,5 ± 0,5
30	Drain plug		3,3 ± 0,3

C3	BE4/5 ENHANCED TRACTION GEARBOX: TIGHTENING TORQUES

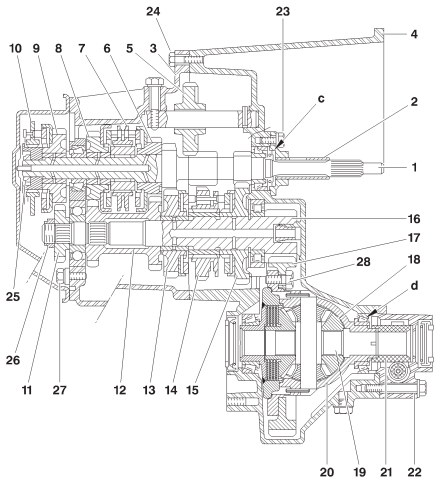

B2CP3WDP

Tightening torques (m.daN).			
Ref.	**Description**	**Number of screws**	**Tightening**
23	**Bearing guide**	3	**1,25 ± 0,2**
24	**Clutch housing**	13	**1,3 ± 0,2**
25	**Primary shaft nut**	1	**7,25 ± 0,7**
26	**Secondary shaft nut**	1	**6,5 ± 0,6**
27	**Clip retaining screw**	2	**1,5 ± 0,2**
28	**Differential gearwheel screw**	2	**6,5 ± 0,6**
	Reverse gear switch	1	**2,5 ± 0,2**

BE4/5 ENHANCED TRACTION GEARBOX: TIGHTENING TORQUES

C3

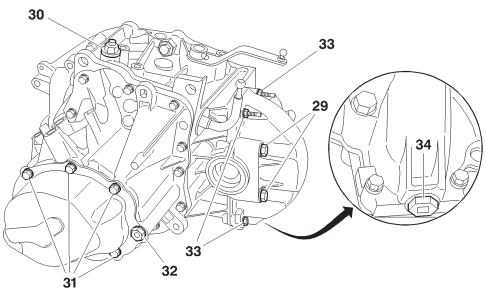

B2CP3BRD

Tightening torques (m.daN).			
Ref.	**Description**	**Number of screws**	**Tightening**
29	**Differential housing**	4	**5 ± 0,5**
30	**Breather**	1	**1,7 ± 0,2**
31	**Gearbox rear casing screw**	7	**1,25 ± 0,2**
32	**Top-up plug**	1	**2,2 ± 0,2**
33	**Differential housing screw**	4	**1,25 ± 0,2**
34	**Drain plug**	1	**3,5 ± 0,3**

C3	BE4/5 GEARBOX: TIGHTENING TORQUES

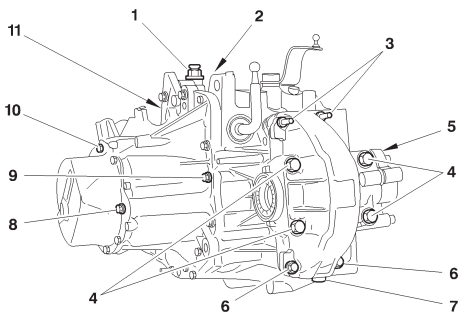

B2CP3ZXD

Tightening torques (m.daN).			
Ref.	Description	Number of screws	Tightening
1	Air vent hole		1,5 ± 0,2
2	Reverse gear rocker shaft fixing nut		4,5 ± 0,2
3	Differential housing fixing nut		1,5 ± 0,2
4	Differential housing screw Ø 10		5 ± 0,5
5	Speedometer drive support		1,5 ± 0,2
6	Differential housing screw Ø 7		1,5 ± 0,2
7	Drain plug		3,5 ± 0,2
8	Top-up plug		2,2 ± 0,2
9	Gearbox casing /clutch housing fixing screw		1,3 ± 0,2
10	5th gear cover fixing screw		1,5 ± 0,2
11	Reverse gear switch		2,5 ± 0,2

BE4/5 GEARBOX: TIGHTENING TORQUES

C3

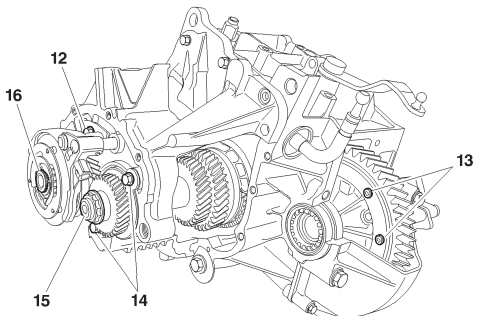

B2CP3ZYD

Tightening torques (m.daN)			
Ref.	Description	Number of screws	Tightening
12	Fork shaft stop screw		1,5 ± 0,2
13	Differential gearwheel screw		7 ± 0,5
14	Bearing retaining screw		1,5 ± 0,2
15	Secondary shaft nut		6,5 ± 0,5
16	Primary shaft nut		7,3 ± 0,5,

C3	BE4/5 GEARBOX: TIGHTENING TORQUES

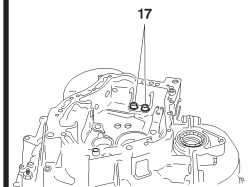

B2CP3ZZC

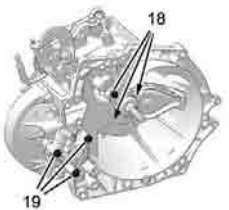

B2CP400C

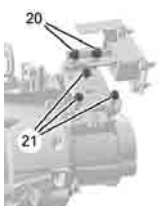

B2CP41YC

Tightening torques (m.daN).			
Ref.	Description	Number of screws	Tightening
17	Gear control support fixing screw		1,5 ± 0,2
18	Bearing guide screw		1,25 ± 0,2
19	Speedometer housing fixing screw		1,5 ± 0,2
20	Gearbox support fixing screw Ø 10		5,5 ± 0,5
21	Gearbox housing intermediate support fixing screw Ø 10		5,7 ± 0,8

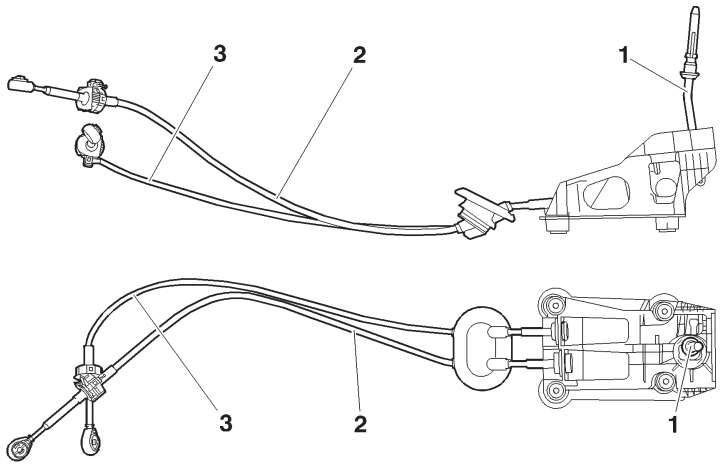

B2CP3HXD

(1) Gear control lever

(2) Gear engagement control cable **(*)**

(3) Gear selection control cable **(*)**

(*) The two cables cannot be separated.

CHECKS AND ADJUSTMENTS: MA/5 GEARBOX CONTROLS

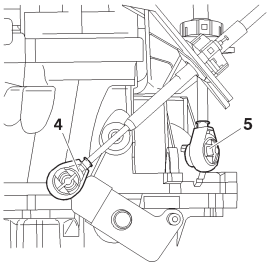

B2CP3HYC

(4) Gear engagement ball-joint **Ø 10 mm**

(5) Gear selection ball-joint **Ø 10 mm**

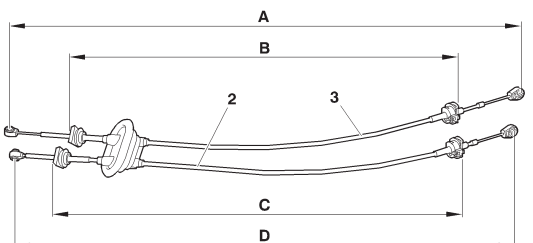

B2CP3HZD

	C2		C3	
	Length D	**Length C**	**Length D**	**Length C**
Gear engagement control cable **(2)**	**1040 mm**	**815 mm**	**1015 mm**	**790 mm**
	Length A	**Length B**	**Length A**	**Length B**
Gear engagement control cable **(3)**	**1149 mm**	**800 mm**	**1093 mm**	**775 mm**

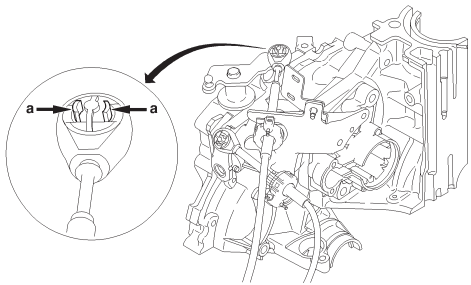

B2CP3J0D

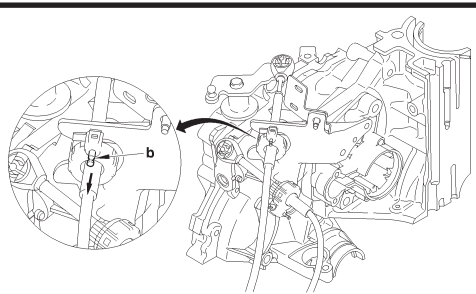

B2CP3J1D

Adjustment.

WARNING: Do not use any tool to detach the ball-joints.

The gear selection control and gear engagement control cables cannot be adjusted.

To unlock the ball-joint, press at **«a»** then pull the ball-joint upwards.

To release the sleeve stops, pull the needles **«b»**, in the direction of the arrow, then disengage the sleeve stops from their supports.

C3	BE4/5 GEARBOX CONTROLS

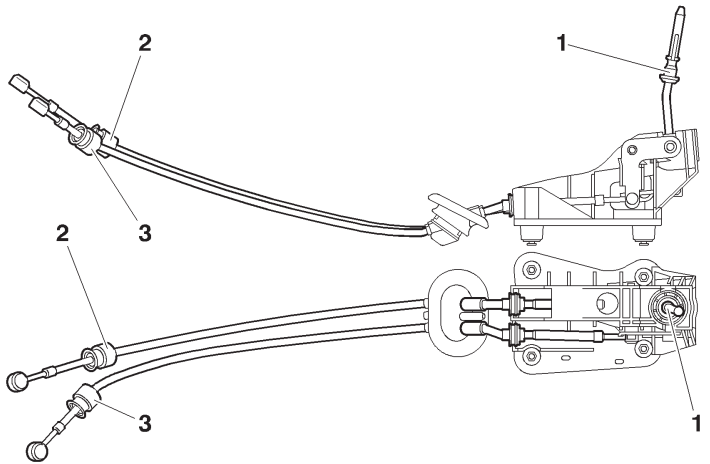

B2CP3J3D

(1) Gear control lever

(2) Gear engagement control cable **(*)**

(3) Gear selection control cable **(*)**

(*) The two cables cannot be separated.

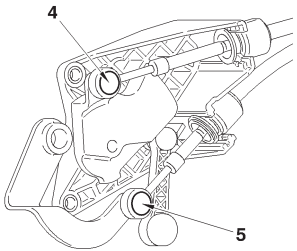

B2CP3J4C

(4) Gear engagement ball-joint **Ø 10 mm**

(5) Gear selection ball-joint **Ø 10 mm**

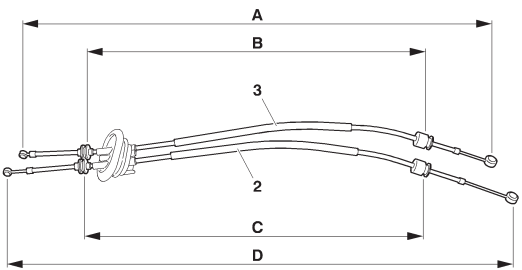

B2CP3J5D

	Length A	Length B
Gear engagement control cable **(5)**	**907 mm**	**645 mm**
	Length D	**Length C**
Gear engagement control cable **(4)**	**965 mm**	**610 mm**

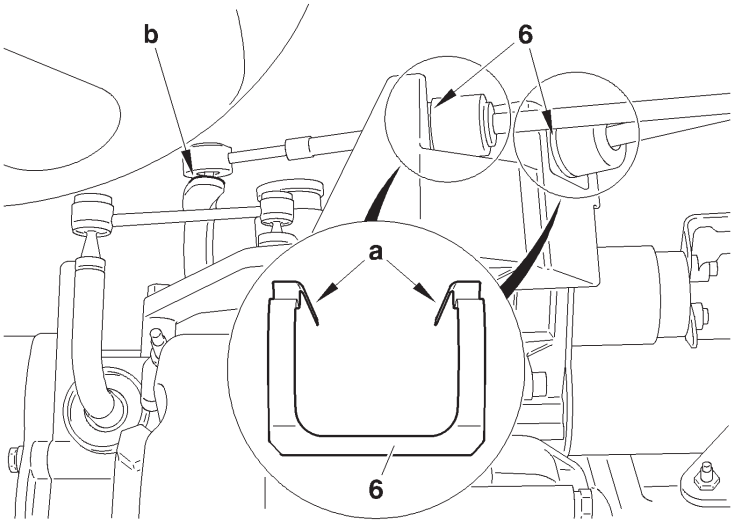

B2CP3J6D

Adjustment.

The gear selection control and gear engagement control cables cannot be adjusted.

To release the ball-joint, press at «**b**» then pull the ball-joint upwards.

To release sleeve stops:

- Press on the tabs of the clip **(6)** at «**a**».
- Disengage the sleeve stops from their supports.

PRECAUTIONS TO BE TAKEN.

Towing.
The front of the vehicle must be raised in order to be towed.
If the front of the vehicle cannot be raised.

IMPERATIVE:
- Put gear lever in position «N».
- Do not add any oil.
- Do not exceed 30 mph over a distance of 30 miles of maximum.

Driving.
Never drive with the ignition switched off.
Never push the vehicle to try to start it *(impossible with an automatic gearbox)*.

Lubrication.
The automatic gearbox is only lubricated when the engine is running.

Repairs on electrical components.

Do not disconnect:
- The battery when the engine is running.
- The ECU when the ignition is switched on.

Before reconnecting a switch, check:
- The condition of the various contacts *(for deformation, corrosion etc.)*.
- The presence and condition of the mechanical locking.

When performing electrical checks:
- The battery should be correctly charged.
- Never use a voltage source higher than **16V**.
- Never use a test lamp.

PRECAUTIONS TO BE TAKEN.

Repairs on mechanical components.

Never place the gearbox on the ground without protection.

In order to avoid breaking the input shaft ring, it is **imperative** that the converter retaining bracket should be in place when handling the gearbox.

It is **imperative** to use the centring peg and the converter retaining bracket to couple the gearbox on the engine.

After coupling the gearbox on the engine, remove the centring peg.

Modification of the oil usage counter value.

Exchanging the gearbox ECU:

- Note down the gearbox counter value.
- Transfer the value read into the the new gearbox ECU.

Exchanging the gearbox:

- Initialise the oil usage counter to **0**.

Draining the gearbox:

- Initialise the oil usage counter *(follow the diagnostic tool procedure)*.

Procedure to be followed prior to carrying out repairs on AL4 autoactive gearbox

If a gearbox malfunction occurs, there are two possible configurations depending on the seriousness of the fault:
- Gearbox in back-up mode with a replacement programme of *(the fault values are taken in substitution).*
- Gearbox in back-up mode with an emergency programme *(3rd hydraulic).*

WARNING: In the emergency programme, an impact is felt when changing P/R, N/R and N/D.

Reception client.
Discuss with the customer, to find out all the malfunction symptoms.

Oil quality - Oil level.
Oil quality.
If the gearbox has suffered a serious fault resulting in a malfunction or the destruction of a clutch, the oil will overheat and become contaminated with impurities: the oil is said to be «**burnt**».
This is characterised by a black colour and the presence of an unpleasant smell.

ESSENTIAL: The gearbox must be replaced.

Oil level *(see corresponding operation).*

An excessive oil level can result in the following consequences:
- Excessive heating of the oil.
- Oil leaks.

An insufficent level causes the destruction of the gearbox.
Top up the level of oil in the gearbox *(if necessary).*

Check using a diagnostic tool.
Read the fault codes *(engine and gearbox).*

Absence of fault codes.
Carry out parameter measures, actuator tests and a road test.

Presence of fault codes.
Carry out the necessary repairs.
Delete the fault codes.
Carry out a road test to check the repair and, if need be, modify the gearbox ECU parameters *(this is essential after an initialisation of the ECU).*

Procedure for initialising the automatic gearbox ECU

Downloading.

Updating the gearbox ECU by downloading:
- Follow the procedure using the diagnostic tool.

The downloading operation enables the automatic gearbox to be updated, or adapted to an evolution of the engine ECU.
Before commencing the downloading, take the value of the oil usage counter present in the automatic gearbox ECU.

After the downloading operation, carry out the following:
- A clearing of faults.
- An initialisation of the auto-adaptives.
- A writing of the value of the oil usage counter previously read.
- A road test.

ESSENTIAL: Every update of the automatic gearbox ECU should be accompanied by an update of the engine ECU.

Updating the value of the oil usage counter.

Using PROXIA.

Access to reading and recording of the oil counter is via the menu:

- **«Configuration *(integrated circuit button)*/Oil counter»**.

Adjustment of the oil counter value is done in incremental steps of **2750 units**.

Using LEXIA.

Access to reading and recording of the oil counter is via the menu:

- **«Oil counter»**.

Adjustment of the oil counter value is done by entering directly the **5 figures** of the oil counter.

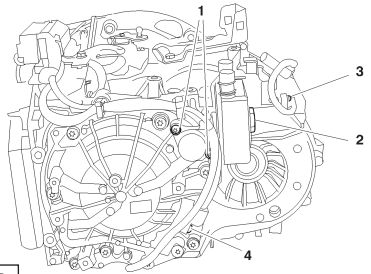

B2CP3EDD

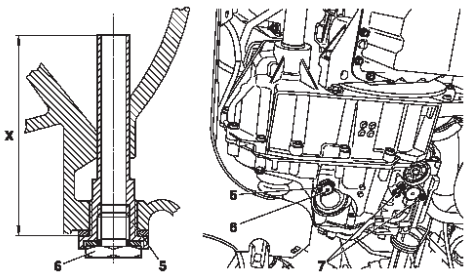

B2CP311D

Tightening torques (m.daN).

(1) Oil flow modulation electrovalve fixing	**: 1 ± 0,2**
(2) Heat exchanger fixing	**: 5 ± 1**
(3) Output speed sensor fixing	**: 1 ± 0,2**
(4) Output speed sensor fixing	**: 1 ± 0,2**
(5) Oil overflow and drain fixing	**: 4 ± 0,2**
(6) Oil level plug	**: 2,4 ± 0,4**
(7) Oil pressure sensor fixing	**: 0,8 ± 0,1**

C3 AL4 AUTOMATIC GEARBOX: TIGHTENING TORQUES

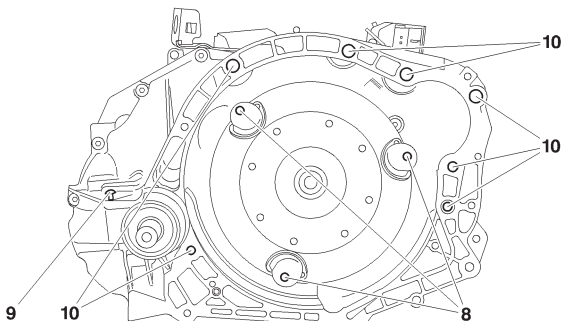

B2CP3EED

Tightening torques (m.daN).

(8) Fixing of converter on diaphragm

Pre-tightening	**: 1 ± 0,1**
Tightening	**: 3 ± 0,3**

(9) Plug fixing **: 0,8 ± 0,2**

(10) Gearbox fixing on engine **: 5,2 ± 1**

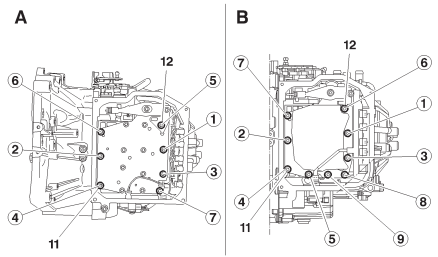

B2CP3EFD

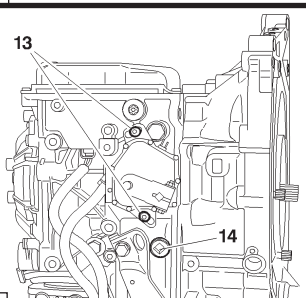

B2CP3EGC

Tightening torques (m.daN).

A: EW7 and **EW10** engines

Hydraulic block fixing.

Centre the hydraulic block, using screws **(11)** and **(12)**.

Pre-tighten *(no strict order)*	**: 0,9.**
Slacken	**: All 7 screws.**
Tighten *(respect the order indicated)*	**: 0,75.**

NOTE: The screw **(11)** is shouldered.

B: DW10 engine

Hydraulic block fixing.

Centre the hydraulic block, using screws **(11)** and **(12)**.

Pre-tighten *(no strict order)*	**: 0,9.**
Slacken	**: All 7 screws.**
Tighten *(respect the order indicated)*	: **0,75.**

NOTE: The screw **(11)** is shouldered.

(13) Fixing of selector lever position switch	**: 1,5 ± 0,2**
(14) Oil filler plug	**: 2,4 ± 0,4**

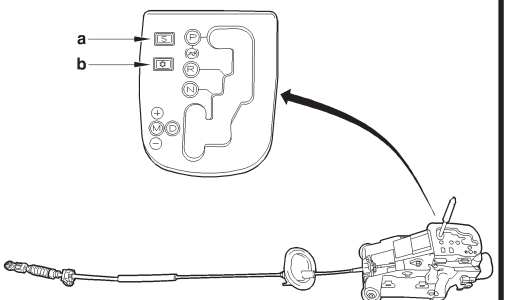

B2CP3H7D

In passenger compartment.
The gear selector is guided by the shape of the stepped gate and by a retaining spring which pulls it to the left hand side.

The gear selector control has **5 positions**.

Position **«P»**: Park *(locking and immobilisation of the vehicle)*.
Position **«R»**: Reverse gear.
Position **«N»**: Neutral.
Position **«D»**: Drive *(use of the **4 gears** in their autoadaptive automatic function).*

Position **«M»**: Manual *(this position lets the driver select his own gears in sequential mode by pulling the gear selector to **«M-»** or pushing it to **«M+»**).*

NOTE: Only the positions **«P»** or **«N»** authorise the starting of the engine.

In position **«M»**, selection is by an electronic sensor located close to the gear lever.
The variation of flux necessary to the movement of the sensor cells is obtained by a magnet located on the lever itself. This enables the change of status.

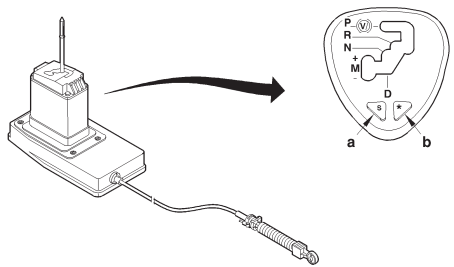

B2CP3DKD

In passenger compartment (continued).

The information is transmitted to the gearbox ECU.

NOTE: The vehicle is equipped with the **«shift loc»**: you have to switch on the ignition and press the brake pedal to unlock the selector lever from position **«P»**.

Two switches placed on the gear control gate permit the driver to choose one of the following three driving programmes:

- **Normal** programme: Operates as the default programme *(eco law, autoadaptive mode)*.
- **Sport** programme **(a)**: Permits a more dynamic, sporty performance.
- **Snow** programme **(b)**: Facilitates starting and adhesion on slippery surfaces.

NOTE: To return to the normal programme, press a **second time** on the sport switch or snow switch.

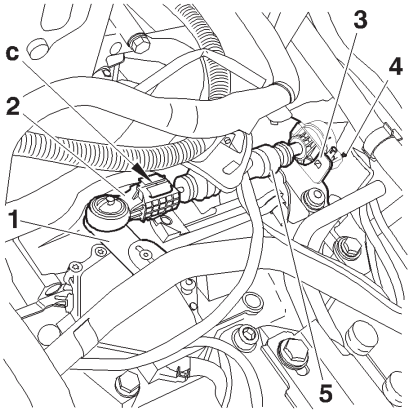

B2CP3H8C

Gearbox end.

The automatic gearbox is controlled by a cable.

«**c**» or «**d**» Push-button.

(1) Control lever with ball-joint

(2) Automatic adjustment *(pull out the button to adjust the control, push it in to lock the adjustment of the control)*

(3) Sleeve stop

(4) Selection control locking clip **(5)** on the sleeve stop **(3)**

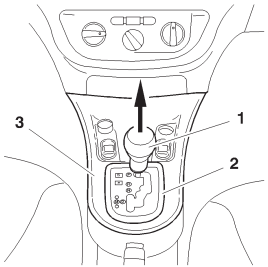

C5FP0ETC

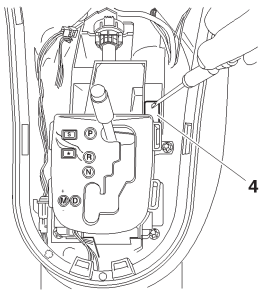

B2CP3GZC

SHIFT LOCK.

NOTE: The **«shift lock»** is a system that locks the gear selection lever in position **«P»**.

Unlocking the «SHIFT LOCK» ***(normal operation).***
- Switch on the ignition.
- Press the brake pedal and keep it pressed.
- Move the gear selection lever out of position **«P»**.

Unlocking the «SHIFT LOCK» ***(with an operating fault).***
NOTE: It is impossible to unlock the **«shift lock»** with the **«Normal operation»** method.
The fault may originate from one of the following components:
- **«Shift lock»**.
- Gear lever position switch.
- Automatic gearbox ECU.
- Electrical harnesses.
- Battery voltage.

Remove:
- The gear lever knob **(1)** *(pull upwards)*.
- The cover **(2)** *(Unclip)*.
- The top of the central console **(3)**.
- Unlock the **«shift lock»** **(4)** with the aid of a screwdriver.
- Move the gear selection lever out of position **«P»**.

DRAINING / FILLING / TOP-UP: AL4 GEARBOX

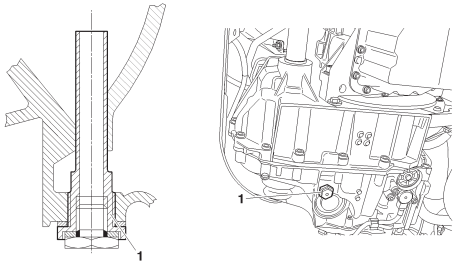

B2CP3AYD

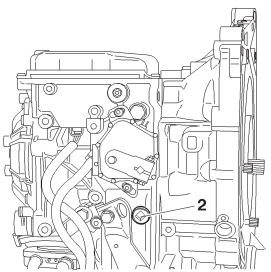

B2CP31GC

Tools.

[1] Filling cylinder **: (-).0341**

Draining.

IMPERATIVE: The gearbox should be drained when the oil is warm *(at least 60°C)*, to eliminate the impurities in suspension in the oil.

NOTE: Draining is partial, the converter cannot be completely emptied.

Remove the drain plug **(1)**.

NOTE: Approx. **3 litres** of oil should flow out.

Filling.

Refit the drain plug **(1)** *(equipped with a new seal)*, tighten to **2,4 ± 0,2 m.daN**.

Remove the oil filler cap **(2)**.

Use tool **[1]**.

Oil capacity for dry gearbox:

- **EW** engine: **5,85** litres.
- **DW** engine: **5,40** litres.
- Oil remaining after draining: **3 litres** *(approx.)*.
- Quantity of oil to be put in: **3 litres** *(approx.)*.

Refit the oil filler cap **(2)** *(equipped with a new seal)*, tighten to **2,4± 0,2 m.daN**.

Initialise the oil wear counter *(follow the diagnostic tool procedure)*.

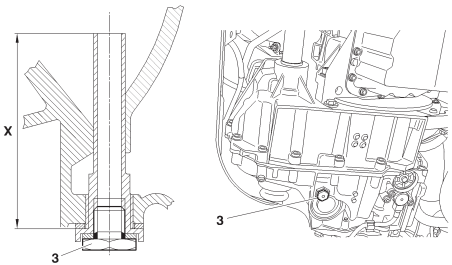

B2CP3AZD

Checking the oil level.

Prior conditions:

- Vehicle in horizontal position.
- Check gearbox is not in back-up mode.
- Remove the oil filler cap **(2)**.
- Add **0.5** litres extra oil into the gearbox.
- Foot on the brake, change through all the gears.
- Selection lever in position **"P"**.
- Engine running, at idle.
- Oil temperature: **60°C (+8°C; -2°C)**.
- Remove the oil level plug **(3)**.

C3 **TU3** engines: Dimension **«X» = 81 mm**.

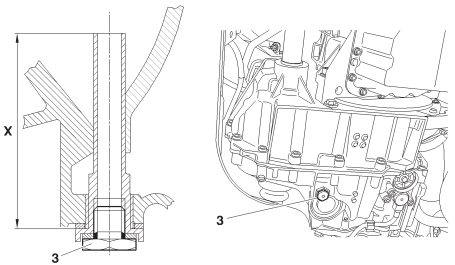

B2CP3AZD

Thread of oil then "drip-drip".

Refit the plug **(3)**. Tighten to **2,4± 0,2 m.daN**.

"Drip-drip" or nothing.
Refit the oil level plug **(3)**.
Stop the engine.
Add **0.5** litres extra oil into the gearbox.
Repeat the oil level procedure.

NOTE: The level is correct at the moment the thread of oil becomes drip-drip.

Refit the oil level plug **(3)** *(equipped with a new seal)*, tighten to **2,4± 0,2 m.daN**.

Checking the oil level (continued).
Refit the oil filler plug **(3)** *(equipped with a new seal)*, tighten to **2,4± 0,2 m.daN**.
An excessive level of oil can lead to the following consequences:
- Oil heating up abnormally,
- Oil leaks.

A level that is too low will result in the destruction of the gearbox.

DRIVESHAFTS - GEARBOX							C2 - C3 - C3 PLURIEL
			Tightening torques (m.daN)		Gearbox oil seal mandrels		
Vehicles	Gearbox	Engines	Driveshaft bearing	Driveshaft nut	RH side	LH side	Tool kit
C2 C3 C3 Pluriel	MA/5	TU1/3 - ET3 DV4	NO	24,5 ± 0,5	7114-T.W	7114-T.X	7116-T
		TU5	2 ± 0,2				
	BE4/5	DV4 - DV6		32 ± 1,5			
C3	AL4	TU3JP	1,8 ± 0,1	32,5 ± 2,5	Seal extractor RH / LH (-) 0338 C		(-) 0338
					(-) 0338 J1 + (-) 0338 J3	(-) 0338 H1 + (-) 0338 H3	

Tightening torque (m.daN) for wheel bolts: C2 C3 C3 PLURIEL = 9 ± 1.

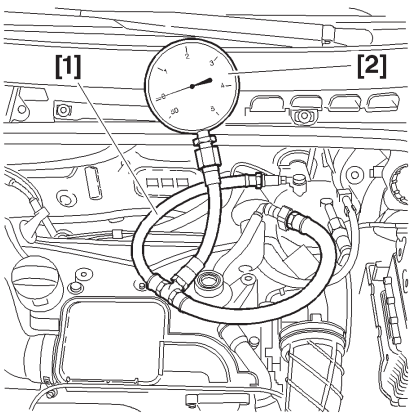

B1BP2NWC

Engine: DV4TD

Tools.

[1] Ø 10 mm low pressure connector **: 4215-T**
[2] Pressure gauge for testing boost pressure **: 4073-T.A** **Toolkit 4073-T**

IMPERATIVE: Respect the safety and cleanliness specific to high pressure diesel injection engines.

Link tools **[1]** and **[2]** in series between the fuel high pressure pump and the fuel filter.

ESSENTIAL: Check that the tool [2] is clean.

Check the negative pressure according to the table below:

Vacuum	Observations
10 ± 5 cmHg	Engine driven by the starter motor
20 ± 5 cmHg	Engine running under full load
60 ± 5 cmHg	Supply circuit obstructed *(full tank strainer, piping, fuel filter)*

C3	CHECKS: LOW PRESSURE FUEL SUPPLY CIRCUIT

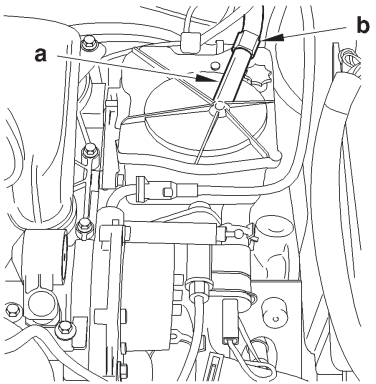

B1BP2PHC

Engine: DV4ATED4

Tools.

[1] Ø 10 mm low pressure connector **: 4215-T**
[2] Pressure gauge for testing boost pressure **: 4073-T.A Toolkit 4073-T**

IMPERATIVE: Respect the safety and cleanliness specific to high pressure diesel injection engines.

Remove the air filter duct.
Link tool **[1]** in series, downstream of the injectors, between the fuel high pressure pump and the fuel filter at **«a»** and **«b»**.

WARNING: Any checking of pressure downstream of the fuel filter is prohibited.

Switch on the ignition.

ESSENTIAL: Check that the tool [2] is clean.

Check the negative pressure according to the table below:

Vacuum	Observations
10 ± 05 cmhg	Engine driven by the starter motor
20 ± 20 cmhg	Engine running under full load
60 ± 05 cmhg	Supply circuit obstructed *(full tank strainer, piping, fuel filter)*

CHECKS: LOW PRESSURE FUEL SUPPLY CIRCUIT

C3

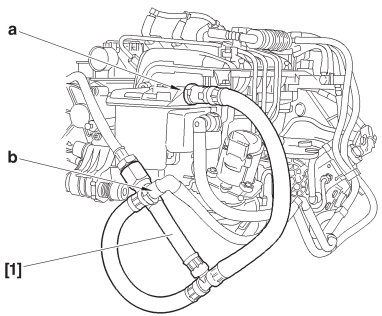

B1CP0GFD

Engine: DV6ATED4

Tools.

[1] Ø 10 mm low pressure connector **: 4215-T**

[2] Pressure gauge for testing boost pressure **: 4073-T.A** **Toolkit 4073-T**

IMPERATIVE: Respect the safety and cleanliness specific to high pressure diesel injection engines.

Remove the air filter duct.

Link tool **[1]** in series, downstream of the injectors, between the fuel high pressure pump and the fuel filter at «**a**» and «**b**».

WARNING: Any checking of pressure downstream of the fuel filter is prohibited.

Switch on the ignition.

Check the pressure:

Vacuum measured by the pressure gauge **[2]**	: Checks.
10 ± 0,5 cmHg	: Engine driven by the starter motor.
20 ± 0,5 cmHg	: Engine running under full load
60 ± 0,5 cmHg	: Supply circuit obstructed *(full tank strainer, piping, fuel filter).*

C2 - C3	CHECKS: TURBO PRESSURE

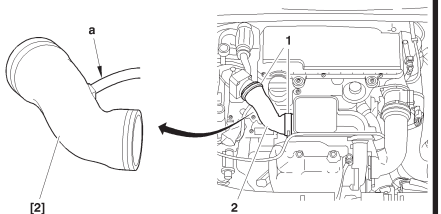

B1BP2NXD

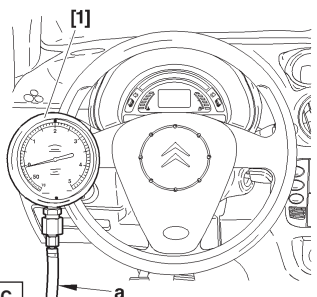

C5FP0F5C

Engine: DV4TD

Tools.

[1] Pressure gauge for checking boost pressure **: 4073-T.A**
[2] Sleeve for checking boost pressure **: (-).0171.F**

Checks.

IMPERATIVE: Respect the following test conditions:
- Engine at operating temperature.
- Vehicle in running order.
- Engine under full load.

Preparation.

Remove the clips **(1)**.
Fit the tool **[2]** in the place of the duct **(2)**.
Couple the sleeve **[2]** on the pressure gauge **[1]** using the tube **«a»**.

Mode of operation.

Position tool **[1]** in the vehicle.
Start the engine.
Engage first gear, start the vehicle.
Engage the gears up to third gear.
Decelerate to an engine speed of **1000 rpm**.
Check the pressure: **0,6 ± 0,05 bar** ***(1500 rpm)***.
Accelerate freely *(change from fourth gear to third gear).*
Check the pressure: **0,9 ± 0,05 bar** *(between **2500** and **3500 rpm**).*
Remove tools **[1]**, **[2]** at **«a»**.
Reposition the tube **(2)** and tighten the clips **(1)**.

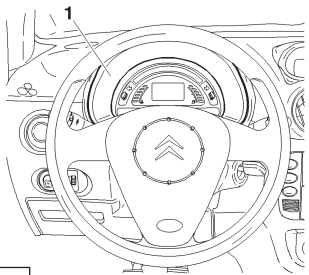

C5FP0EJC

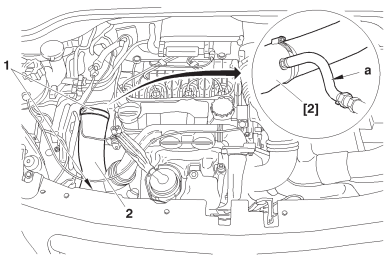

B1BP2NBD

Engine: DV4TED4

Tools.

[1] Pressure gauge for checking boost pressure **: 4073-T.A**
[2] Sleeve for checking boost pressure **: (-).0171.F**

Checks.

IMPERATIVE: Respect the following test conditions:
- Engine at operating temperature.
- Vehicle in running order.
- Engine under full load.

Preparation.

Remove the clips **(1)**.
Fit the tool **[2]** in the place of the duct **(2)**.
Couple the sleeve **[2]** on the pressure gauge **[1]** using the tube **«a»**.

Mode of operation.

Position tool **[1]** in the vehicle.
Start the engine.
Engage first gear, start the vehicle.
Engage the gears up to third gear.
Decelerate to an engine speed of **1000 rpm**.
Check the pressure: **0,6 ± 0,05 bar** ***(1500 rpm)***.
Accelerate freely *(change from fourth gear to third gear).*
Check the pressure: **0,9 ± 0,05 bar** *(between **2500** and **3500 rpm**).*
Remove tools **[1]**, **[2]** at **«a»**.
Reposition the tube **(2)** and tighten the clip **(1)**.

C3	CHECKS: TURBO PRESSURE

Engine: DV6ATED4

IMPERATIVE: Respect the safety and cleanliness requirements.

Preparation.

IMPERATIVE: Respect the following test conditions:
- Engine at operating temperature.
- Vehicle in running order.
- Engine under full load.

Connect the diagnostic tool to the vehicle's diagnostic socket, carry out parameter measures.

Mode of operation.

Start the engine.
Engage first gear, start the vehicle.
Engage the gears up to third gear.
Decelerate to an engine speed of **1000 rpm**.
Check the pressure: **0,6 ± 0,05 bar** ***(1500 rpm)***.
Accelerate freely *(change from fourth gear to third gear).*
Check the pressure: **0,9 ± 0,05 bar** *(between **2500** and **3500 rpm**).*

CHECKING THE AIR SUPPLY CIRCUIT

C2 - C3

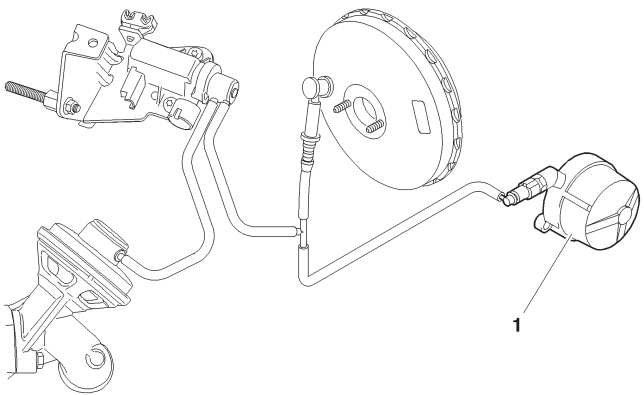

B1HP1K8D

Engine: DV4TED4

Tools.

[1] Manual pressure-vacuum pump **: FACOM DA 16**

Vacuum pump:

- Connect the tool **[1]** onto the vacuum pump **(1)**.
- Start the engine.
- Wait **30 seconds**.
- The vacuum value should be **0.9 ± 0.1 bar** at idle.

C3	CHECKING THE AIR SUPPLY CIRCUIT

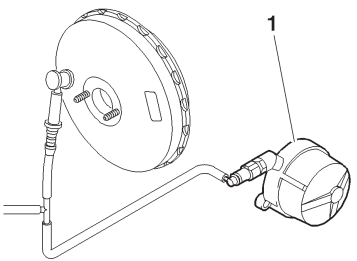

B1HP1UGC

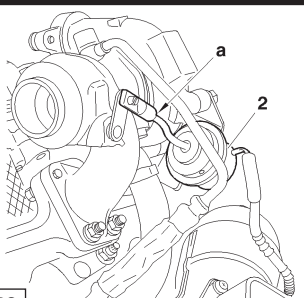

B1HP22RC

Engine: DV6ATED4

Tools.

[1] Manual pressure-vacuum pump **: FACOM DA 16**

Checks.

Vacuum pump.

Connect the tool **[1]** onto the vacuum pump **(1)**.
Start the engine.
The vacuum value should be **0,9 ± 0,1 bar** at idling speed *(after **30 seconds** of running)*.

NOTE: The EGR valve is not linked to the air supply circuit. The EGR valve is piloted by the engine ECU.

Turbo pressure regulator valve.

- Connect the tool **[1]** on the valve (2).
- Apply a vacuum of **0.8 bar**.
- The rod **"a"** move **6 ± 2 mm**.

Engine: DV4TD

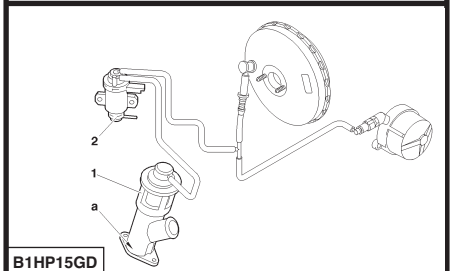

B1HP15GD

Engine: DV4TED4

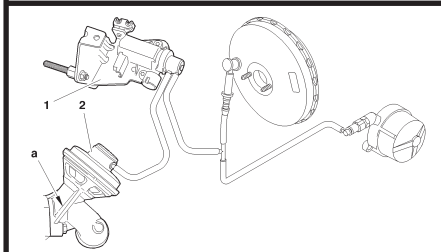

B1HP1K6D

Tools.

[1] Manual pressure-vacuum pump **: FACOM DA 16**

IMPERATIVE: Respect the safety and cleanliness specific to high pressure diesel injection (HDi) engines.

EGR valve.

Connect tool **[1]** on the capsule take-off **(2)**.

Apply a vacuum of approx. **0,6 bar** several times to activate the rod **«a»**.

In abruptly suppressing the vacuum, the valve should click and lock itself back on its seating.

Regulation electrovalve (EGR) ***(engine: 8HX - 8HW).***

Check to be performed between the electrovalve **(1)** and the EGR valve **(2)**.

Link the tool **[1]** in series between the electrovalve **(1)** and the capsule **(2)**.

Compare the values noted with those in the table below.

Regulation electrovalve (EGR) ***(engine: 8HV - 8HY).***

Check to be performed between the electrovalve **(2)** and the EGR valve **(1)**.

Link the tool **[1]** in series, between the electrovalve **(2)** and the capsule **(1)**.

Compare the values noted with those in the table below.

Engine speed (rpm)	Vacuum value
780	0,5 bar
2500	0 bar

SPARKING PLUGS

Vehicles Models		Engine type	BOSCH	Electrode gap setting	EYQUEM	Electrode gap setting	CHAMPION	Electrode gap setting	Tightening torque
C2	1.1i	HFX	FR 7 DE	0,9 ± 0,1	RFN 58 LZ	0,9 ± 0,05	RC 8 YLC	0,9 ± 0,05	2.5 ± 0,2 mda.N
	1.4i	KFV							
	1.6i 16V	NFU	FR 7 ME		RFN 58 HZ				
C3	1.1i	HFX	FR 7 DE		RFN 58 LZ		RC 8 YLC		
	1.4i	KFV							
	1.4i 16V	KFU	VR 8 SE	0,9 ± 0,05					
	1.6i 16V	NFU	FR 7 ME	0,9 ± 0,1	RFN 58 HZ				
C3 Pluriel	1.4i	KFV	FR 7 DE		RFN 58 LZ		RC 8 YLC		
	1.6i 16V	NFU	FR 7 ME		RFN 58 HZ				

C2	AXLE GEOMETRY

Conditions for checking and adjusting

Tyres inflated to correct pressures.	Vehicle at reference height. Steering rack locked at mid point *(see corresponding operation).*

Vehicle heights at reference height

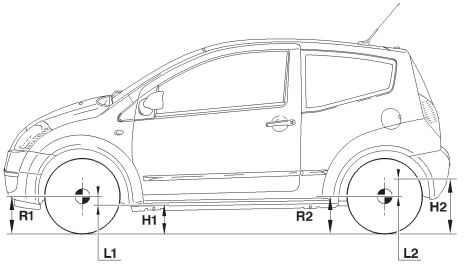

E1APOBZD

Front height	Rear height
L1	**L2**
H1 = R1 – L1	**H2 = R2 + L2**
H1 = Measurement between the measuring zone underneath the front subframe and the ground. **R1 =** Front wheel radius under load. **L1 =** Distance between the wheel axis and the measuring zone underneath the front subframe.	**H2 =** Measurement between the measuring zone underneath the rear sill and the ground. **R2 =** Rear wheel radius under load. **L2 =** Distance between the wheel axis and the measuring zone underneath the rear sill.

AXLE GEOMETRY — C2

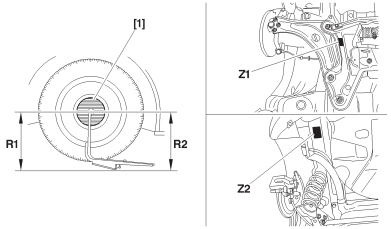

B3CP07SD

Measuring front height	Measuring rear height
[1] Gauge for measuring the wheel radius, 4 bolts, **tool 8006-T**	
Z1 = Measuring zone underneath the front subframe.	**Z2** = Measuring zone underneath the rear sill.
Measure the radius of the front wheel **R1** - Calculate dimension **H1 = R1-L1**	Measure the radius of the rear wheel **R2** - Calculate dimension **H2 = R2+L2**

Value at reference height **(+ 6 - 8 mm)**	**Except CRD vehicles (*)**		Value at reference height **(+ 10 - 6 mm)**	**Except CRD vehicles (*)**	
	TU1JP/3JP - DV4TD	**TU5/JP4/JP4S**		**TU1JP/3JP - DV4TD**	**TU5/JP4/JP4S**
	L1 = 142,5 mm	**L1 = 152,5 mm**		**L2 = 52 mm**	**L2 = 42 mm**
	CRD vehicles (*)			**CRD vehicles (*)**	
	TU1JP/3JP - DV4TD	**TU5/JP4/JP4S**		**TU1JP/3JP - DV4TD**	**TU5/JP4/JP4S**
	L1 = 132,5 mm	**L1 = 152,5 mm**		**L2 = 62 mm**	**L2 = 42 mm**

Compress the suspension to obtain the calculated values.The height difference between the two axle wheel should be less than **10 mm**.
(*) = CRD: Difficult road conditions *(for a type of vehicle with axles and suspensions adapted for driving on rough road surfaces).*

C2	AXLE GEOMETRY

Front axle	Rear axle
Dissymmetry of lower castor at **0° 30'**. Dissymmetry of lower camber at **0° 18'**. **Distribute symmetrically, LH / RH wheel, the total tracking value.**	Dissymmetry of lower camber at **0° 18.**

All types (except CRD vehicles)							
		TU1JP/3JP - DV4TD				TU1JP/3JP - DV4TD	
Vehicle		Tracking	Castor (± 0°18')	Camber (± 0°30')	Pivot angle ± 0°30'	Tracking	Camber
		Adjustable	Non adjustable			Non adjustable	
All Types	mm	2 ± 1				5,5 ± 1	
	0°	0°18' ± 0°09'	3°58'	- 0°31'	11°26'	0°53' ± 0°09'	- 1°30'
		TU5JP4				TU5JP4/JP4S	
		Adjustable	Non adjustable			Non adjustable	
All Types	mm	2 ± 1				5,8 ± 1	
	0°	0°18'± 0°09'	4°	- 0°32'	11°35'	0°49' ± 0°09'	-1°31'
			TU5JP4S				
		Adjustable	Non adjustable				
All Types	mm	2 ± 1					
	0°	0°18'± 0°09'	4°	- 0°27'	11°31'		

	NOTE	
A < B = Positive figure:	+ =	TOE-IN
A > B = Negative figure:	- =	TOE-OUT

AXLE GEOMETRY

C2

Front axle	Rear axle
Dissymmetry of lower castor at **0° 30'.** Dissymmetry of lower camber at **0° 18'.** **Distribute symmetrically, LH / RH wheel, the total tracking value.**	Dissymmetry of lower camber at **0° 18.**

CRD vehicles

Vehicle		TU1JP/3JP - DV4TD				TU1JP/3JP - DV4TD	
		Tracking	Castor (± 0°18')	Camber (± 0°30')	Pivot angle ± 0°30'	Tracking	Camber
		Adjustable	Non adjustable			Non adjustable	
All Types	mm	2 ± 1				5,2 ± 1	
	0°	0°18' ± 0°09'	3°54'	- 0°28'	11°15'	0°50' ± 0°09'	- 1°28'
		TU5JP4				TU5JP4	
		Adjustable	Non adjustable			Non adjustable	
All Types	mm	2 ± 1				5,8 ± 1	
	0°	0°18'± 0°09'	4°	- 0°32'	11°35'	0°49' ± 0°09'	-1°31'

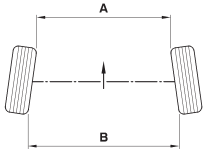

B3CP02UC

	NOTE	
A < B = Positive figure:	+ =	TOE-IN
A > B = Negative figure:	- =	TOE-OUT

FRONT AXLE

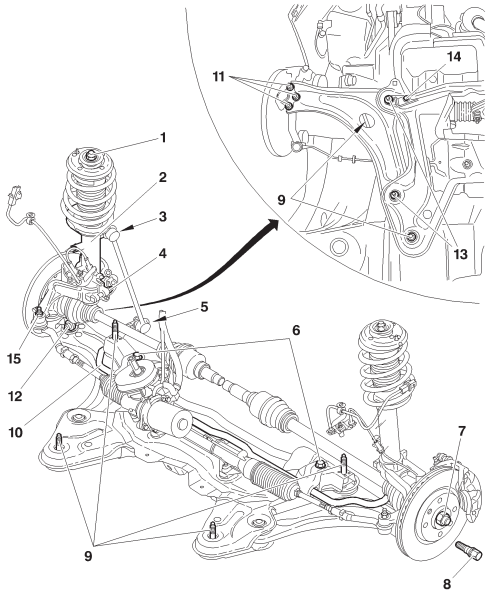

B3CP07RP

Tightening torques (m.daN).

(1) Nut fixing suspension leg on body	**: 6,5 ± 0,6**
(2) Damper	**:**
(3) Anti-roll bar link rod upper ball-joint	**: 3,2 ± 0,3**
(4) Suspension leg pivot	**: 5,4 ± 0,5**
(5) Anti-roll bar link rod lower ball-joint	**: 3,2 ± 0,3**
(6) Anti-roll bar bearing fixing on subframe	**: 8 ± 0,8**
(7) Hub nut	**: 24,5 ± 0,5**
(8) Wheel bolt	**: 9 ± 1**
(9) Subframe to bodyshell fixing screw	**: 10 ± 1**
(10) Anti-roll bar	**:**
(11) Pivot lower ball-joint fixing on lower arm	**: 5,5 ± 0,5**
(12) Pivot lower ball-joint fixing	**: 4 ± 0,4**
(13) Lower arm front and rear mounting fixing	**: 14 ± 0,4**
(14) Stabiliser bar screw	**: 6,6 ± 0,7**
(15) Steering ball-joint fixing	**: 3,5 ± 0,3**

Private vehicles Europe	Anti-roll bar	
	Diameter (mm)	Colour
TU1JP - TU3JP	18	Violet
TU5JP4	20	Green
TU5JP4S	21	Orange
TU1JP - DV4TD	19	Blue
Entreprise vehicles	**Diameter (mm)**	**Colour**
TU1JP - DV4TD	18	Violet
CRD vehicles	**Diameter (mm)**	**Colour**
TU1JP - DV4TD	18	Violet
TU4JP4	20	Green

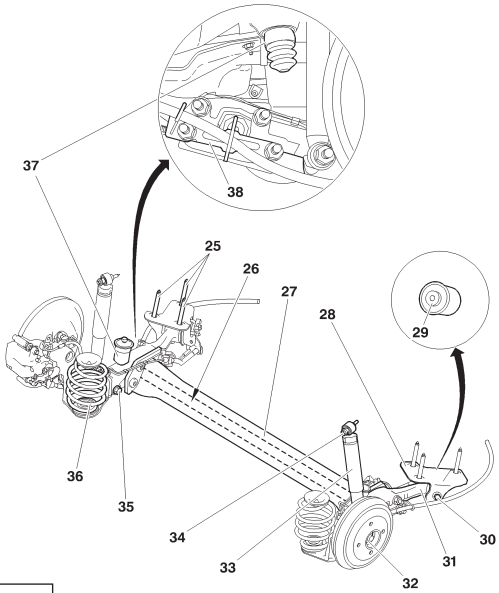

B3DP09UP

Tightening torques (m.daN)

(25) Rear axle fixing screw	**: 10 ± 1**
(26) Anti-roll bar	**:**
(27) Rear axle crossmember	**:**
(28) Rear suspension arm silentblock yoke	**:**
(29) Rear suspension arm silentblock	**:**
(30) Yoke / suspension arm fixing screw	**: 7 ± 0,5**
(31) Rear suspension arm	**:**
(32) Stub axle bearing nut	**: 20 ± 2**
(33) Damper	**:**
(34) Damper upper fixing	**: 4,5 ± 0,4**
(35) Damper lower fixing	**: 9,3 ± 0,9**
(36) Suspension springs	**:**
(37) Travel stop	**:**
(38) Secondary brake cable guide support	**:**

Private vehicles Europe	**Anti-roll bar**
	Diameter (mm)
TU1JP - TU3JP	**20,5 *(tubular)***
DV4TD	**23,5 *(tubular)***
TU5JP4	**25 *(solid)***
TU5JP4S	**26 *(tubular)***
Entreprise vehicle	**Diameter (mm)**
TU1JP - DV4TD	**20,5 *(tubular)***
CRD vehicles	**Diameter (mm)**
TU1JP - DV4TD	**20,5 *(tubular)***
TU5JP4	**25,5 *(solid)***

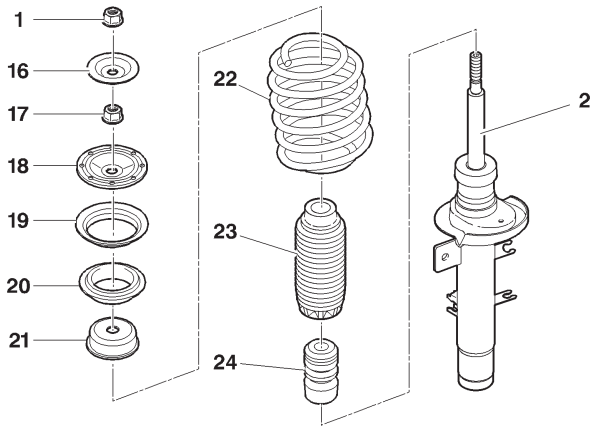

B3BP180D

Front axle

(1) Nut fixing suspension leg on body	**: 6,5 ± 0,6**
(2) Damper	
(16) Cup	
(17) Damper nut	**: 6,5 ± 0,6**
(18) Damper cup	
(19) Ball bearing	
(20) Spring thrust cup	
(21) Travel stop cup	
(22) Suspension spring	
(23) Damper rod protector	
(24) Travel stop	

Steering column

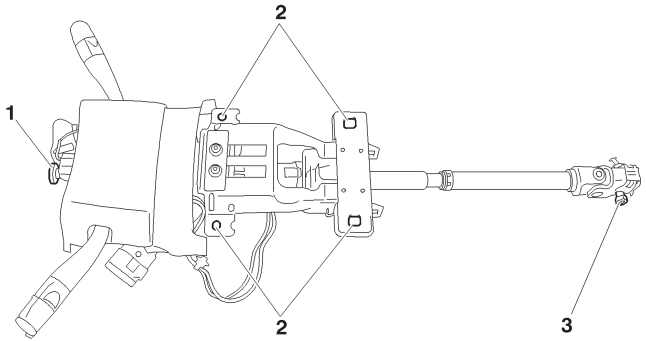

B3EP13GD

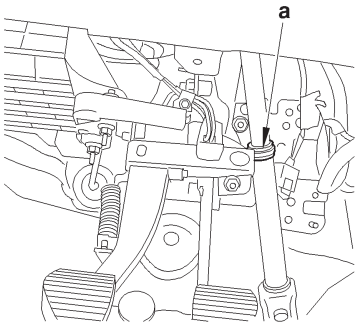

B3EP13HC

Tightening torques (m.daN).

(1) Steering wheel fixing	**: 2 ± 0,3**
(2) Steering column fixing on support	**: 2,2 ± 0,5**
(3) Steering cardan fixing	**: 2,2 ± 0,2**

Identification

Identified by the colour of the ring at «**a**».

Left hand drive	**: BLUE ring.**
Right hand drive	**: WHITE ring**

FEATURES OF ELECTRIC POWER STEERING

Steering mechanism

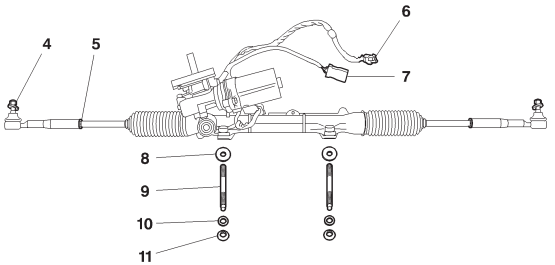

B3EP13JD

Tightening torques (m.daN)

(4) Ball-joint fixing on pivot	**: 3,5 ± 0,3**
(5) Steering rod lock-nut	**: 5 ± 0,5**
(8) Threaded washer	
(9) Stud	**: 0,8 ± 0,1**
(10) Flat washers	
(11) Fixing of mechanism on subframe	**: 8 ± 0,8**

	TU1JP - TU3JP - DV4TD	TU5JP4	TU5JP4S
Electric motor	**60 A**	**65 A**	
Steering rack travel	**2x72**	**2x64**	
Steering ratio	**1/45,6**		**1/49,38**
Number of rotations of steering wheel	**3,2**	**2,8**	**2,6**
Inner angle of lock	**38°**	**32°30’**	
Outer angle of lock	**32°24’**	**28°42’**	

Connectors.

(6) Supply of electric assistance motor

(7) Torque sensor signals

Steering assistance

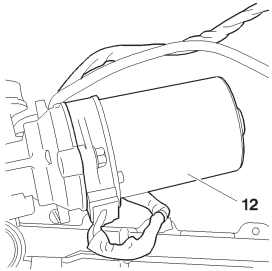

B3EP13KC

Supplier: **KOYO.**

The steering assistance is provided by the assistance motor **(12)**, controlled by the ECU.
Power delivered to the assistance motor *(12)* depends on:

- Speed of the vehicle.

- Torque applied on the steering wheel.

Electric power steering ECU

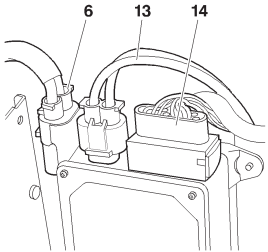

B3EP13LC

Only one ECU version, whatever the engine-type.

The electric power steering ECU is linked to the following connectors:

- **(6)** Assistance motor supply.

- **(13)** Electric power steering ECU supply.

- **(14)** Control signals.

After changing the electric power steering ECU, it is necessary to perform a configuration.

Centring the steering rack

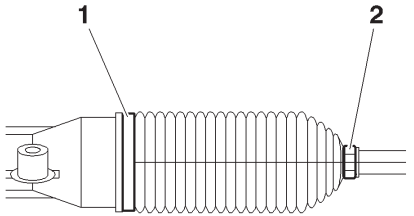

B3EP13UC

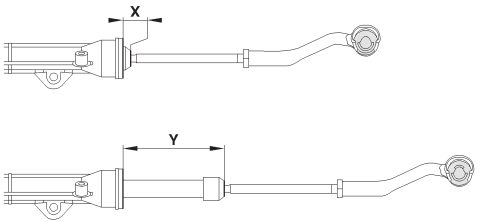

B3EP13VD

Preliminary operation.

Raise and support the vehicle on a two-column lift.
Remove, on the RH side of the steering rack:
- Clip **(1)**.
- Clip **(2)**.

Release the steering rack protection gaiter.

Setting.

Move the steering to full left hand lock.
Measure the dimension **X**.
Move the steering to full right hand lock.
Measure the dimension **Y**.

Calculate the dimension: **L = (Y - X): 2**.

Refit:
- The steering rack protection gaiter.
- New clips **(1)** and **(2)**.

Conditions for checking and adjusting

Tyres inflated to correct pressures. Vehicle at reference height.
Steering rack locked at mid point *(see corresponding operation)*.

Vehicle heights at reference height

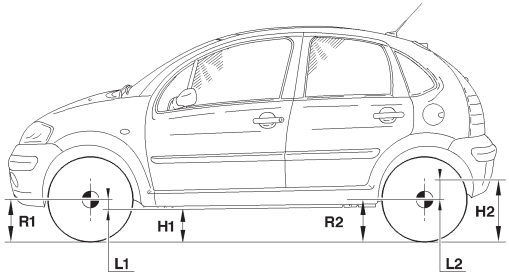

E1AP09MD

Front height	Rear height
L1	L2
H1 = R1 - L1	H1 = R1 - L1
H1 = Measurement between the measuring zone underneath the front subframe and the ground. **R1 =** Front wheel radius under load. **L1 =** Distance between the wheel axis and the measuring zone underneath the front subframe.	**H2 =** Measurement between the measuring zone underneath the rear sill and the ground. **R2 =** Rear wheel radius under load. **L2 =** Distance between the wheel axis and the measuring zone underneath the rear sill.

C3	AXLE GEOMETRY

Checks at reference height

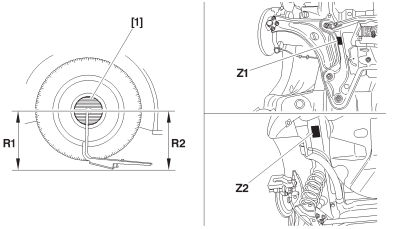

B3CP07SD

Measuring front height			Measuring rear height		
[1] Gauge for measuring the wheel radius, 4 bolts, tool **4003-T** or **8006-T** *(according to version)*.					
Z1 = Measuring zone underneath the front subframe.			**Z2** = Measuring zone underneath the rear sill..		
Measure the radius of the front wheel **R1** - Calculate dimension **H1 = R1–L1**			Measure the radius of the rear wheel **R2** - Calculate dimension **H2 = R2+L2**		
Value at reference height **(+ 6 - 8 mm)**	All types except CRD (*) **Raised suspension Administration vehicle C3 version XTR**	CRD (*) **Raised suspension Administration vehicle C3 version XTR**	Value at reference height **(+ 10 - 6 mm)**	All types except CRD (*) **Raised suspension Administration vehicle C3 version XTR**	CRD (*) **Raised suspension Administration vehicle C3 version XTR**
	L1 = 142,5 mm	**L1 = 132,5 mm**		**L2 = 52 mm**	**L2 = 62 mm**

(*) = CRD: Difficult road conditions.
Definition for a type of vehicle whose axles and suspensions are adapted for driving on rough roads. Compress the suspension to obtain the calculated values. The height difference between the two axle wheel should be less than **10 mm**.

Dissymmetry of lower castor at **0° 30'.**

Dissymmetry of lower camber at **0° 18'.**

(*) CRD = Difficult road conditions.

ESSENTIAL: Distribute symmetrically, LH / RH wheel, the total tracking value.

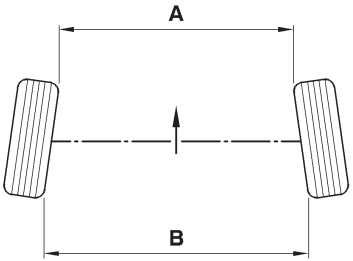

B3CP02UC

	NOTE	
A < B = Positive figure:	+ =	TOE-IN
A > B = Negative figure:	- =	TOE-OUT

C3	AXLE GEOMETRY					
All types except: CRD (*), Raised suspension, Administration vehicle, C3 version XTR						
Front axle						
Engines	Wheel dimensions (in inches)		Tracking Adjustable	Castor (± 0°18') Non adjustable	Camber (± 0°30') Non adjustable	Pivot angle (± 0°30') Non adjustable
TU1JP TU3JP BV MA (except Exclusive)	14	mm	- 2 ± 1	3° 57'	- 0°28'	11°24'
		0°	- 0°19' ± 0°10'			
TU3JP BV AL4	15	mm	- 2 ± 1			
		0°	- 0°18' ± 0°09'			
TU3JP BV MA (except Exclusive) ET3J4 - TU5JP4 DV4TD - DV4TED4 DV6ATED4		mm	- 2 ± 1	3° 54'		
		0°	- 0°18' ± 0°09'			
	16	mm	- 2 ± 1			
		0°	- 0°17' ± 0°09'			
Rear axle						
			Non adjustable			
			Tracking		Camber (± 0°18')	
TU1JP TU3JP BV MA (except Exclusive)	14	mm	5,5 ± 1		- 1°30'	
		0°	0°53' ± 0°10'			
TU3JP BV AL4	15	mm	5,5 ± 1			
		0°	0°50' ± 0°09'			
TU3JP BV MA (except Exclusive) ET3J4 - TU5JP4 DV4TD - DV4TED4 DV6ATED4		mm	5,5 ± 1			
		0°	0°50' ± 0°09'			
	16	mm	5,5 ± 1			
		0°	0°47' ± 0°09'			

AXLE GEOMETRY					C3
All types except: CRD (*), Raised suspension, Administration vehicle, C3 version XTR					
Front axle					
Wheel dimensions		Tracking	Castor (± 0°18')	Camber (± 0°30')	Pivot angle (± 0°30')
(in inches)		Adjustable	Non adjustable		
14	mm	- 2 ± 1	3° 53'	- 0°26	11°14'
	0°	- 0°19' ± 0°10'			
15	mm	- 2 ± 1			
	0°	- 0°18' ± 0°09'			
Rear axle					
		Non adjustable			
		Tracking		Camber (± 0°18')	
14	mm	5,2 ± 1		- 1°28'	
	0°	0°50' ± 0°10'			
15	mm	5,2 ± 1			
	0°	0°47' ± 0°09'			

(*) = CRD: Difficult road conditions.

AXLE GEOMETRY

Conditions for checking and adjusting

Tyres inflated to correct pressures. Vehicle at reference height.
Steering rack locked at mid point *(see corresponding operation)*.

Vehicle heights at reference height

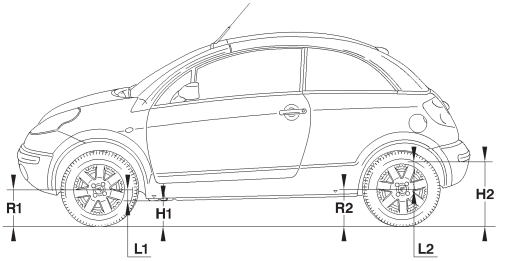

E1AP0AUD

Front height	Rear height
L1	**L2**
H1 = R1 - L1	**H2 = R2 + L2**
H1 = Measurement between the measuring zone underneath the front subframe and the ground. **R1 =** Front wheel radius under load. **L1 =** Distance between the wheel axis and the measuring zone underneath the front subframe.	**H2 =** Measurement between the measuring zone underneath the rear sill and the ground. **R2 =** Rear wheel radius under load. **L2 =** Distance between the wheel axis and the measuring zone underneath the rear sill.

Checks at reference height

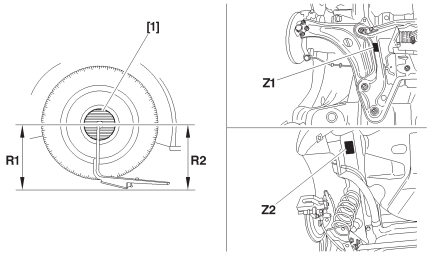

B3CP07SD

Measuring front height		Measuring rear height	
[1] Gauge for measuring the wheel radius, 4 bolts, tool **4003-T**			
Z1 = Measuring zone underneath the front subframe.		**Z2** = Measuring zone underneath the rear sill.	
Measure the radius of the front wheel **R1** - Calculate dimension **H1 = R1-L1**		Measure the radius of the rear wheel **R2** - Calculate dimension **H2 = R2+L2**	
Value at reference height **(+ 6 - 8 mm)**	**All Types**	Value at reference height **(+ 10 - 6 mm)**	**All Types**
	L1 = 132,5 mm		**L2 = 47 mm**

(*) = CRD : Difficult road conditions.
Definition for a type of vehicle whose axles and suspensions are adapted for driving on rough roads. Compress the suspension to obtain the calculated values. The height difference between the two axle dimensions should be less than **10 mm**.

C3 PLURIEL	AXLE GEOMETRY

Front axle	Rear axle
Dissymmetry of lower castor at **0° 30'.** Dissymmetry of lower camber at **0° 18'** **Distribute symmetrically, LH / RH wheel, the total tracking value.**	Dissymmetry of lower camber at **0° 18.**

All types							
Vehicle		**Tracking**	**Castor (± 0°18')**	**Camber (± 0°30')**	**Pivot angle (± 0°30')**	**Tracking**	**Camber (± 0°18')**
		Adjustable	**Non adjustable**			**Non adjustable**	
All Types	mm	**- 2 ± 1**				**5,7 ± 1**	
	0°	**- 0°18' ± 0°09'**	**3°53'**	**- 0°26'**	**11°14'**	**0°51' ± 0°09'**	**- 1°30'**

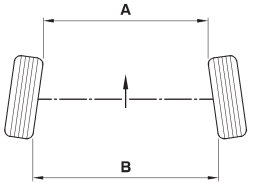

B3CP02UC

	NOTE	
A < B = Positive figure:	+ =	TOE-IN
A > B = Negative figure:	- =	TOE-OUT

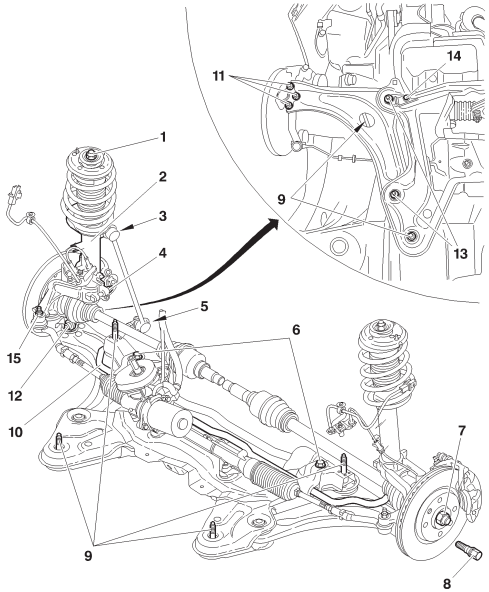

B3CP07RP

Tightening torques (m.daN).

(1) Nut fixing suspension leg on body	**: 6,5 ± 0,6**
(2) Suspension leg	**:**
(3) Anti-roll bar link rod upper ball-joint	**: 3,2 ± 0,3**
(4) Suspension leg pivot	**: 5,4 ± 0,5**
(5) Anti-roll bar link rod lower ball-joint	**: 3,2 ± 0,3**
(6) Anti-roll bar bearing fixing on subframe	**: 8 ± 0,8**
(7) Hub nut	**: 24,5 ± 0,5**
(8) Wheel bolt	**: 9 ± 1**
(9) Subframe to bodyshell fixing screw	**: 10 ± 1**
(10) Anti-roll bar	**:**
(11) Pivot lower ball-joint fixing on lower arm	**: 5,5 ± 0,5**
(12) Pivot lower ball-joint fixing	**: 4 ± 0,4**
(13) Lower arm front and rear mounting fixing	**: 14 ± 0,4**
(14) Stabiliser bar screw	**: 6,6 ± 0,7**
(15) Steering ball-joint fixing	**: 3,5 ± 0,3**

		Anti-roll bar	
		Diameter (mm)	Colour
C3	All types	19	Blue
C3 Pluriel	All types	20	Green

REAR AXLE

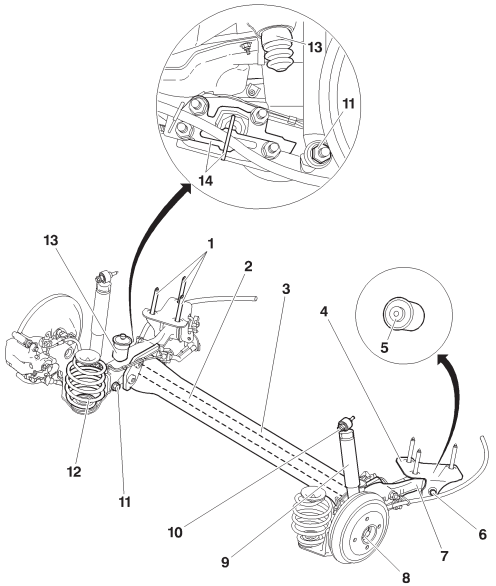

B3CP0AFP

Tightening torques (m.daN).

(1) Rear axle fixing screw	**: 10 ± 1**
(2) Anti-roll bar	**:**
(3) Rear axle crossmember	**:**
(4) Rear suspension arm rubber mounting yoke	**:**
(5) Rear suspension arm rubber mounting	**:**
(6) Yoke / suspension arm fixing screw	**: 7,6 ± 0,5**
(7) Rear suspension arm	**:**
(8) Stub axle bearing nut	**: 20 ± 2 greased**
(9) Damper	**:**
(10) Damper upper fixing	**: 4,5 ± 0,4**
(11) Damper lower fixing	**: 9,3 ± 1**
(12) Suspension spring	**:**
(13) Travel stop	**:**
(14) Secondary brake cable guide and its support	**:**

		Anti-roll bar
		Diameter (mm)
C3 C3 Pluriel	All types	26 *(tubular)*

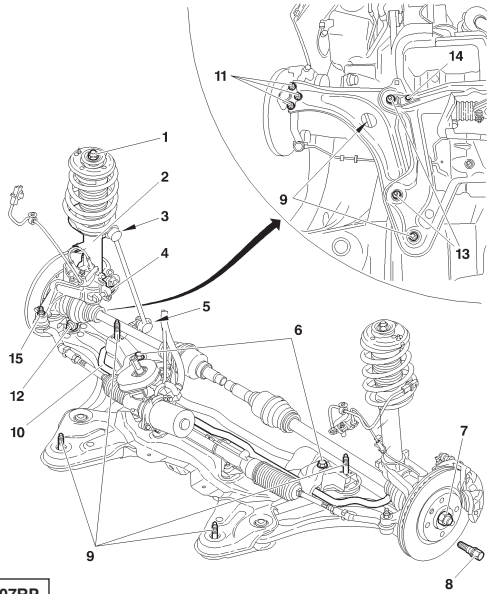

B3CP07RP

Front axle

(1) Nut fixing suspension leg on body	**: 6,5 ± 0,6**
(2) Damper	**:**
(3) Anti-roll bar link rod upper ball-joint	**: 3,2 ± 0,3**
(4) Suspension leg pivot	**: 5,4 ± 0,5**
(5) Anti-roll bar link rod lower ball-joint	**: 3,2 ± 0,3**
(6) Anti-roll bar bearing fixing on subframe	**: 8 ± 0,8**
(7) Hub nut	**: 24,5 ± 0,5**
(8) Wheel bolt	**: 9 ± 1**
(9) Subframe to bodyshell fixing screw	**: 10 ± 1**
(10) Anti-roll bar	**:**
(11) Pivot lower ball-joint fixing on lower arm	**: 5,5 ± 0,5**
(12) Pivot lower ball-joint fixing	**: 4 ± 0,4**
(13) Lower arm front and rear mounting fixing	**: 14 ± 0,4**
(14) Stabiliser bar screw	**: 6,6 ± 0,7**
(15) Steering ball-joint fixing	**: 3,5 ± 0,3**

Pivot

	Engines	Bearing diameter	Type
C3 C3 Pluriel	**All types**	**72**	**In U *(cast iron)***

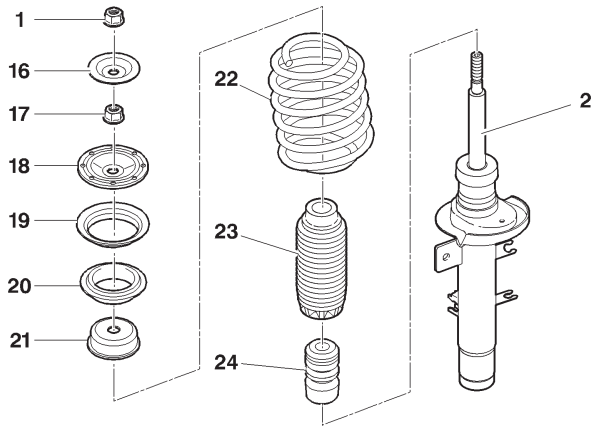

B3BP180D

Front axle

(1) Nut fixing suspension leg on body	**: 6,5 ± 0,6**
(2) Damper	
(16) Cup	
(17) Damper nut	**: 6,5 ± 0,6**
(18) Damper cup	
(19) Ball bearing	
(20) Spring thrust cup	
(21) Travel stop cup	
(22) Suspension spring	
(23) Damper rod protector	
(24) Travel stop	

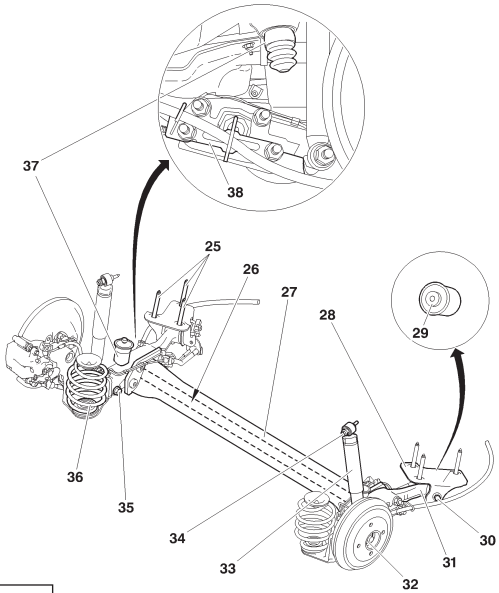

B3CP09UP

Rear axle

(25) Rear axle fixing screw	**: 10 ± 1**
(26) Anti-roll bar	**:**
(27) Rear axle crossmember	**:**
(28) Rear suspension arm silentblock mounting yoke	**:**
(29) Rear suspension arm silentblock	**:**
(30) Suspension arm fixing screw on yoke	**: 7,6 ± 0,5**
(31) Rear suspension arm	**:**
(32) Stub axle bearing nut	**: 20 ± 2 (greased)**
(33) Damper	**:**
(34) Damper upper fixing screw	**: 4,5 ± 0,4**
(35) Damper lower fixing screw	**: 9,3 ± 0,9**
(36) Suspension spring	**:**
(37) Travel stop	**:**
(38) Secondary brake cable guide support	**:**

Steering column

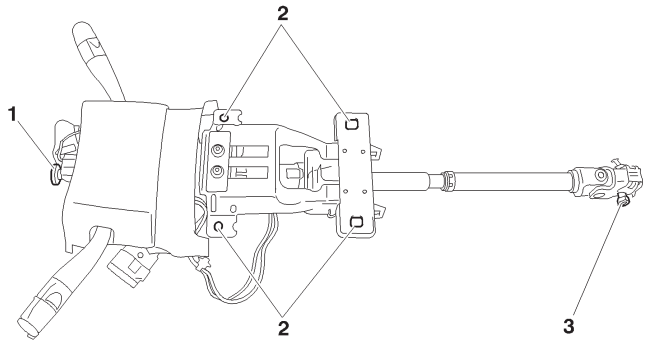

B3EP13GD

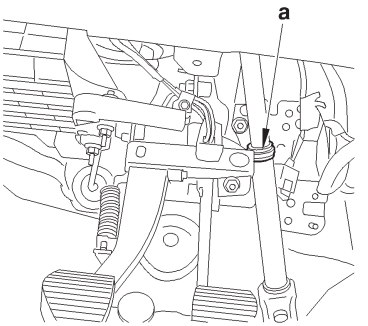

B3EP13HC

Tightening torques (m.daN).

(1) Steering wheel fixing	**: 2 ± 0,3**
(2) Steering column fixing on support	**: 2,2 ± 0,5**
(3) Steering cardan fixing	**: 2,2 ± 0,2**

Identification.

Identified by the colour of the ring at «**a**».

Left hand drive	**: BLUE ring**.
Right hand drive	**: WHITE ring**.

Engines: HFX - KFV - KFU - NFU - 8HX - 8HW - 8HV - 8HY

Steering mechanism

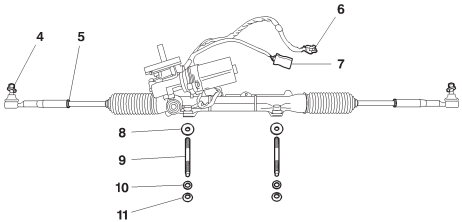

B3EP13JD

Tightening torques (m.daN).

(4) Ball-joint fixing on pivot	**: 3,5 ± 0,3**
(5) Steering rod lock-nut	**: 5 ± 0,5**
(8) Threaded washer	
(9) Stud	**: 0,8 ± 0,1**
(10) Flat washers	
(11) Fixing of mechanism on subframe	**: 8 ± 0,8**

	C3	C3 Pluriel
	TU3JP - TU5JP4 - DV4TD	TU3JP (BVA) - ET3J4 DV4TD
Electric motor	**60 A**	**65 A**
Steering rack travel	**2x72**	**2x64**
Steering ratio	**45,6/1**	
Number of rotations of steering wheel	**3,2**	**2,8**
Inner angle of lock	**38°**	**32°30'**
Outer angle of lock	**32°24'**	**28°42'**

Connectors.

(6) Supply of electric assistance motor

(7) Torque sensor signals

Steering assistance

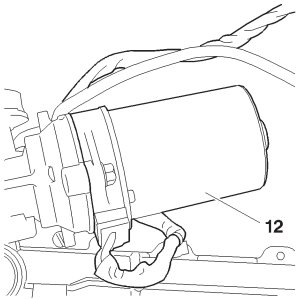

B3EP13KC

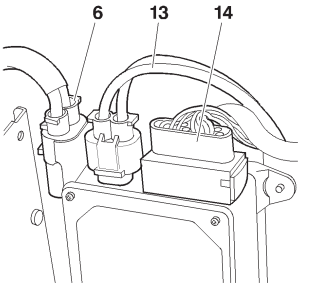

B3EP13LC

Supplier: **KOYO.**

The steering assistance is provided by the assistance motor **(12)**, controlled by the ECU.

Power delivered to the assistance motor **(12)** depends on:

- Speed of the vehicle.
- Torque applied on the steering wheel.

Electric power-assisted steering ECU.

Only one ECU version, whatever the engine-type.
The electric power steering ECU is linked to the following connectors:
- **(6)** Assistance motor supply.
- **(13)** Electric power steering ECU supply.
- **(14)** Control signals.

After changing the electric power steering ECU, it is necessary to perform a configuration *(see corresponding operation)*.

Centring the steering rack

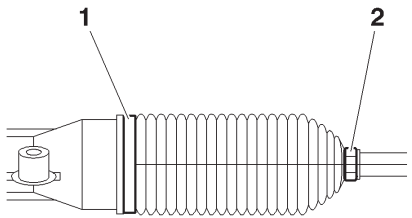

B3EP13UC

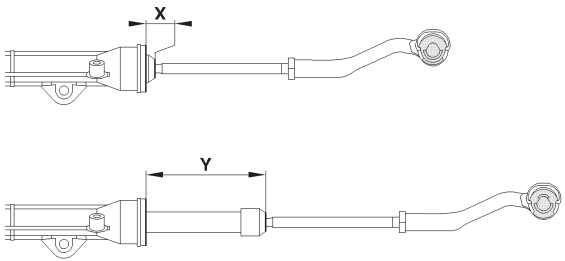

B3EP13VD

Preliminary operation.

Raise and support the vehicle on a two-column lift.
Remove, on the RH side of the steering rack:
- Clip **(1)**.
- Clip **(2)**.

Release the steering rack protection gaiter.

Setting.

Move the steering to full left hand lock.
Measure the dimension **X**.
Move the steering to full right hand lock.
Measure the dimension **Y**.

Calculate the dimension:
L = (Y - X): 2.

Refit:
- The steering rack protection gaiter.
- New clips **(1)** and **(2)**.

C2			BRAKE SPECIFICATIONS (WITHOUT ABS)		
			TU1JP	TU3JP	DV4TD
FT	Ø mm	Master cylinder	20,6		
		Master vac	203,2		
		Caliper makes/pistons	LUCAS.TRW-/-C 48/13-/-48		
		Disc / Plain	266		
	Disc thickness/minimum thickness		13/11		
	Maximum run-out (mm)		0,05		
	Difference in max. thickness on same circumference (mm)		0,01		
	Brake pad supplier/grade		TEXTAR-/-T 4144		
	Original thickness/minimum thickness		13/3		
RR	Ø mm	Original drum/maximum	203/205		
		Width	38		
	Supplier/grade		DON-8259/1		

BRAKE SPECIFICATIONS (WITH ABS)								C2
				TU1JP	TU3JP	TU5JP4	TU5JP4S	DV4TD
FT	Ø mm	Master cylinder		22,2 (*)				
		Master vac		228,6				
		Caliper makes/ pistons		LUCAS .TRW-/-C 48/13-/-48		LUCAS .TRW C 54/22-/-54		LUCAS .TRW-/- C 48/13-/-48
		Disc	Plain	266				266
			Ventilated			266		
	Disc thickness/minimum thickness			13/11		22/20		13/11
	Brake pad supplier/grade			TEXTAR-/-T 4144				
RR	Ø mm	Disc	Plain			247		
	Disc thickness/minimum thickness					9/7		
	Brake pad supplier/grade					LUCAS .TRW C 38 HR 9/13		
	Ø mm	Original drum maximum/width		203/205-/-38				203/205-/-38
	Supplier/lining grade			DON 8259/1		GALFER G 4554		DON 8259/1

(*) = With emergency braking assistance (AFU).

C2	BRAKE SPECIFICATIONS

Braking circuit without ABS - REF (drum brakes at the rear)	Braking system specifications
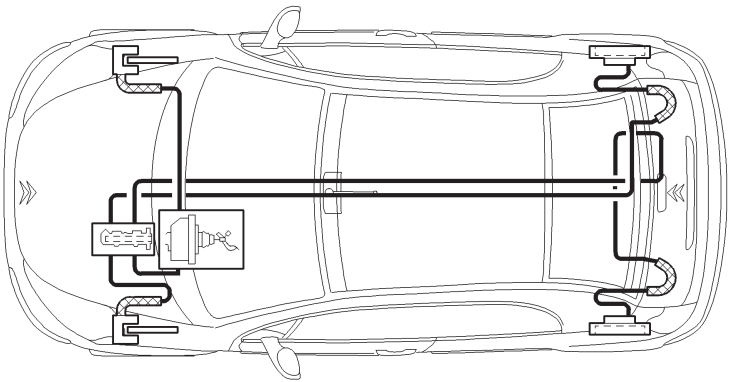 B3FP7C7D	- Braking circuit at «**X**». - Front brakes with ventilated discs **(*)**. - Rear brakes with eitther drums or discs **(*)**. - Handbrake lever controlling cables acting on the rear wheels. The compensator and main brake limiter functions are assured by the **ABS EBD** system. **NOTE: REF =** Electronic Brakeforce Distribution. **(*) =** according to version.

BRAKE SPECIFICATIONS

C2

Braking circuit with ABS - REF (drum brakes at the rear)

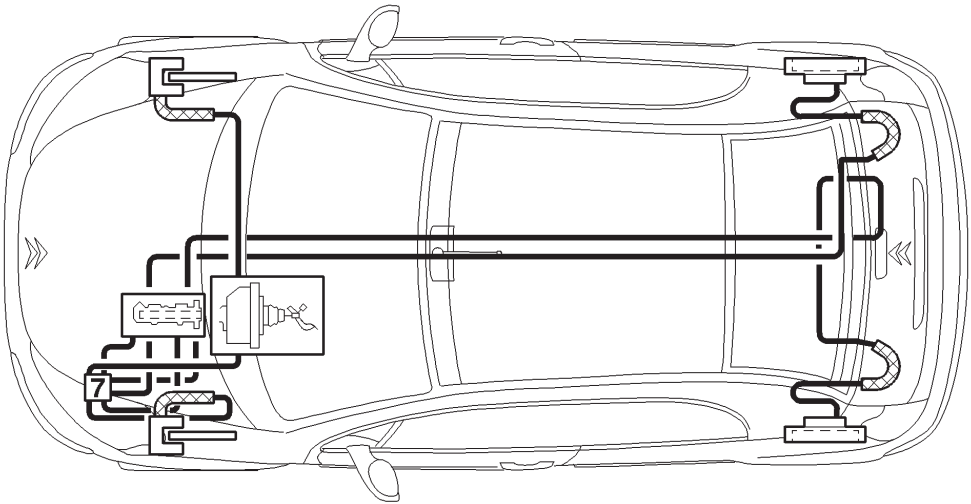

B3FP7C8D

C2	BRAKE SPECIFICATIONS

Braking circuit with ABS - REF (disc brakes at the rear)

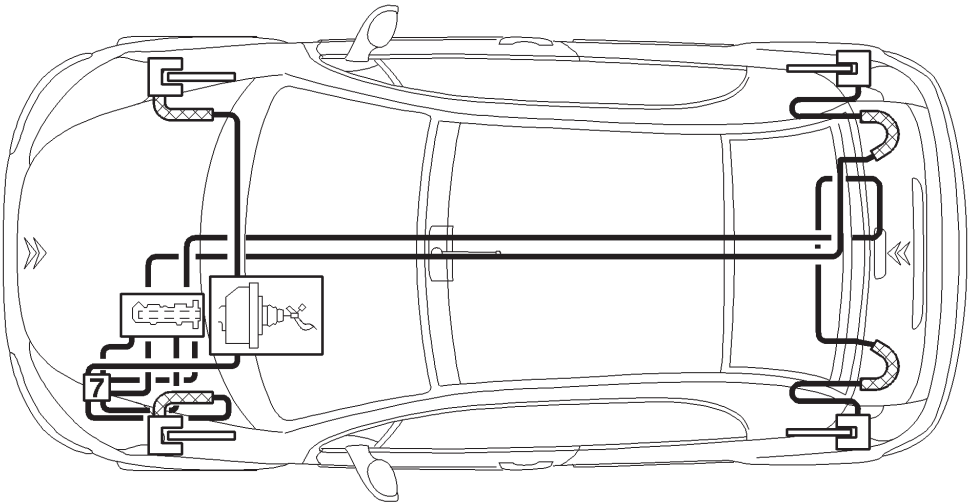

B3FP7C9D

BRAKE SPECIFICATIONS

C2

Brake pedal gear

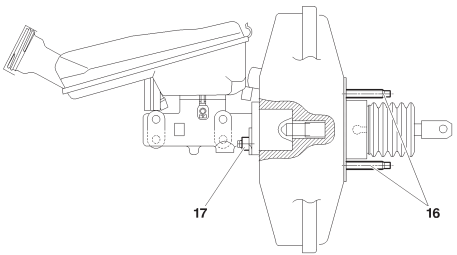

B3FP166D

Front brakes

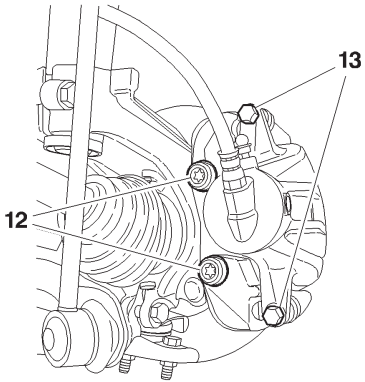

B3FP164C

Rear brakes

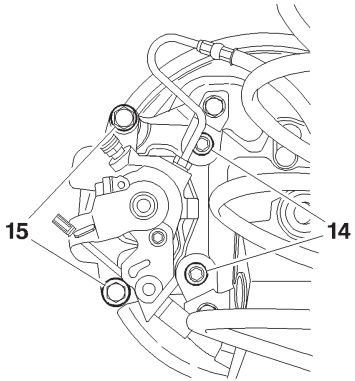

B3FP165C

Tightening torques (m.daN).

(16) Servo fixing	**: 2,2 ± 0,3**
(17) Fixing on master cylinder	**: 2 ± 0,5**
(12) Yoke fixing on caliper	**: 10,5 ± 1**
(13) Yoke fixing on caliper	**: 3 ± 0,3**
(14) Rear caliper fixing on arm	**: 5,3 ± 0,5**
(15) Yoke fixing on caliper	**: 3,8 ± 0,3**

C2 HANDBRAKE (adjustment)

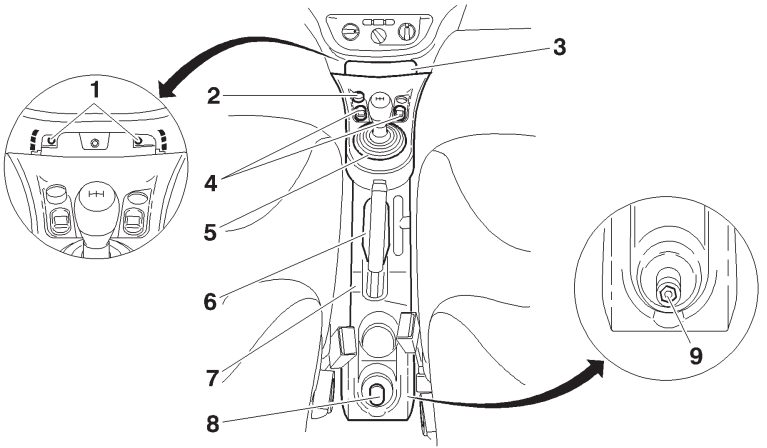

C5FP0ELD

Adjustment.

Lift and chock the vehicle.

Remove:
- The rear cover **(8)**.
- The nut **(9)**.
- The handbrake trim **(6)**.
- The gear lever gaiter **(5)**.
- The front cover **(3)**.
- The screws **(1)**.

Disconnect the connectors of the following components:
- The cigar lighter **(2)**.
- The electric window buttons **(4)**.

Remove the central console **(7)**.

WARNING: Check that the brake cables are correctly routed under the vehicle.

Slacken the handbrake lever.
Press gently on the brake pedal *(then repeat the operation **3 times**)*.
Pull vigorously on the handbrake lever **4** or **5 times**.

HANDBRAKE (adjustment) C2

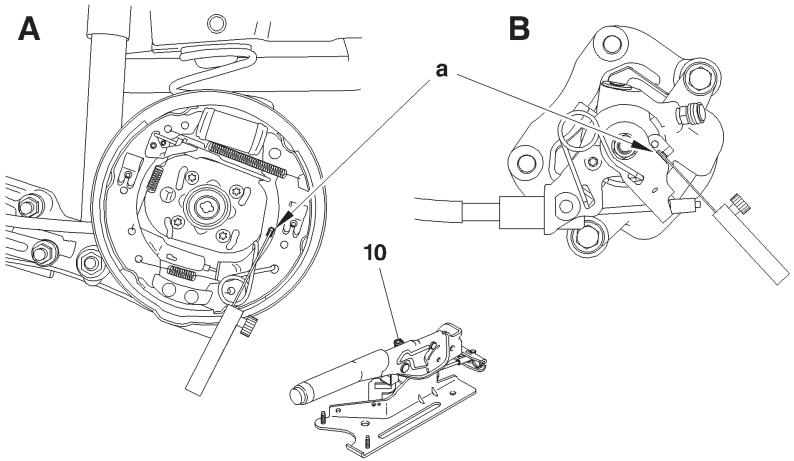

B3FP16ED

Adjustment (continued).

A: Drum brakes
B: Disc brakes
(10) Nut for adjusting cable tensions
Remove:
- The rear wheels.
- The drums *(according to version)*.

Release the handbrake.
Use a gauge set to measure at **«a»** the travel of the lever from its stop.
Adjust the nut **(10)** to obtain a travel of less than or equal to **1 mm** at **«a»**.
Refit the brake drums without tightening them *(according to version)*.
Action the handbrake lever **8 times** with an effort of **40 m.daN**.
With the handbrake released, check the travel of the lever at **«a»**, using a gauge set.
NOTE: The travel should be less than **1 mm** and more than **0,05 mm**.
Refit:
- The brake drums.
- The wheels.
- The central console.

Check the operation of the handbrake.

C2	BLEEDING AND FILLING THE BRAKING SYSTEM

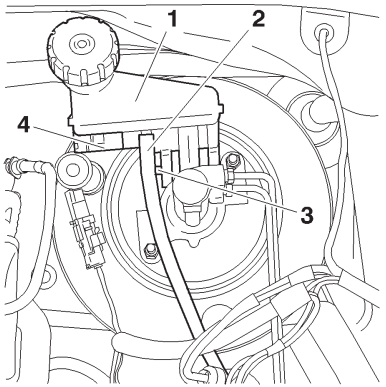

B3FP15XC

Tools.

[1] Generic bleeding apparatus **: «LURO» or similar**

Bleeding, refilling.

Draining.

Drain the brake fluid reservoir **(1)** to the maximum *(if necessary, use a clean syringe)*.
Disconnect the connector **(4)**.
Uncouple the pipe **(2)**.
Unscrew the shaft **(3)**.
Remove the reservoir **(1)**.
- Empty the brake fluid reservoir **(1)**.
- Clean the brake fluid reservoir **(1)**.

Refit:
- The brake fluid reservoir **(1)**.
- The shaft **(3)**.
- Couple the pipe **(2)**.
- Reconnect the connector **(4)**.

Filling the braking system.

WARNING: Use only those hydraulic fluids that are approved and recommended.

- Fill the brake fluid reservoir **(1)**.

Bleeding the braking system.

WARNING: During the bleeding operation, take care to maintain the level of brake fluid in the reservoir and to top it up, using only brake fluid that is clean and clear.

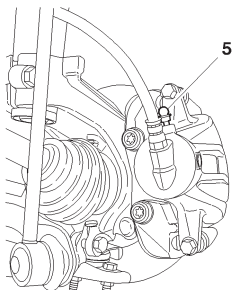

B3FP15YC

Bleeding, filling (continued).

Bleeding the primary braking circuit.

WARNING: The ABS should not be active during the bleeding operation.

- Front brake caliper: Bleed screw **(5)**.
A: Rear brake caliper
B: Rear brake drum

Bleed screw **(6)**.

Bleed each wheel cylinder, proceeding in the following order:

- Front LH wheel.
- Front RH wheel..
- Rear LH wheel.
- Rear RH wheel.

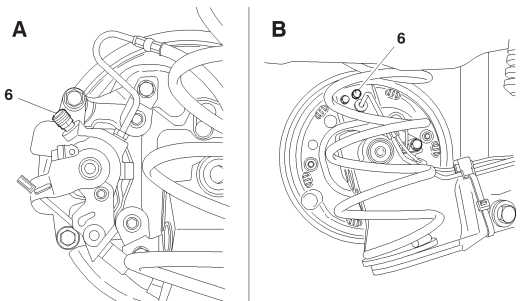

B3FP15ZD

C2	BLEEDING AND FILLING THE BRAKING SYSTEM

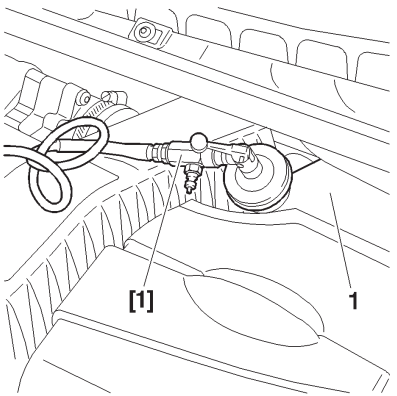

B3FP160C

Bleeding, filling (continued).

With the bleeding apparatus.
- Connect the bleeding apparatus **[1]** on the brake fluid reservoir **(1)**.
- Adjust the apparatus pressure to **2 bars**.

For each circuit:
- Connect a transparent tube onto the bleed screw, submerge the other end of the tube in a clean container.
- Open the bleed screw, wait until the fluid is flowing out without air bubbles.
- Close the bleed screw.
- Remove the bleeding apparatus **[1]**.
- Check the brake fluid level *(should be between «**MINI**» level and «**MAXI**» level).*
- Fill if necessary with the approved and recommended synthetic brake fluid.

Without the bleeding apparatus.

NOTE: Two operators are necessary.

For each circuit :
- Apply the brake pedal to place the circuit under pressure.
- Connect a transparent tube onto the bleed screw, submerge the other end of the tube in a clean container.
- Open the bleed screw, wait until the fluid is flowing out without air bubbles.
- Close the bleed screw.
- Remove the tool **[1]**.

NOTE: Recommence the process a **second time** if that is necessary.

- Check the brake fluid level *(should be between «**MINI**» level and «**MAXI**» level).*
- Fill if necessary with the approved and recommended synthetic brake fluid.

BRAKE SPECIFICATIONS (WITHOUT ABS REF)										C3
				TU1JP	TU3JP	ET3J4		DV4TD		DV6ATED4
Engines				HFX	KFV	KFU	KFU (*)	8HX	8HZ	9HX
FT	Ø mm	Master cylinder		20,6						
		Master vac		203,2						
		Caliper makes/ pistons		LUCAS/TRW C 48/13/48		LUCAS/TRW C 54/22/54		LUCAS/TRW C 48/13/48		LUCAS/TRW C 54/22/54
		Disc	Plain	266				266		
	Disc thickness/minimum thickness			13/11				13/11		
	Ø mm	Disc	Ventilated			266				266
	Disc thickness/minimum thickness					22/20				22/20
	Brake pad supplier/grade			TEXTAR T 4144						
RR	Ø mm	Drum/max. thickness Width		203/205/38						
	Make			DON						
	Brake lining grade			8259						

Without ABS REF: Braking compensators on vehicles without **ABS REF (**)** engines TU1JP TU3JP DV4TD ➔**9666 LUCAS Type CICR (***)** Cut-off pressure (bar) 35
Braking compensators on vehicles without **ABS REF (**)** engines TU1JP TU3JP DV4TD ➔**9666 LUCAS Type CICR (***)** Cut-off pressure (bar) 27.
(*) = STT = Stop and start. **(**) REF =** Electronic brakeforce distribution. **(***) CICR =** Compensator integral to the wheel cylinder.

C3				BRAKE SPECIFICATIONS (WITH ABS REF)								
				TU1JP	TU3JP	ET3J4	TU5JP4	TU5JP4S	DV4TD		DV4TED4	DV6 ATED4
Engines				HFX	KFV	KFU KFU (*)	NFU	NFS	8HX	8HZ	8HY	9HX
FT	Ø mm	Master cylinder		22,2 (**)								
		Master vac		228,6								
		Caliper makes/ pistons		LUCAS/TRW C 48/13 48		LUCAS/TRW C 54/22 54			LUCAS/TRW C 48/13 48		LUCAS/TRW C 54/22 54	
		Disc	Plain	266					266			
	Disc thickness/min. thickness			13/11					13/11			
	Ø mm	Disc	Ventilated			266					266	
	Disc thickness/min. thickness					22/20					22/20	
	Brake pad supplier/grade			TEXTAR T 4144								
RR	Ø mm	Cylinder or caliper		LUCAS C38 HR 9/13/38								
		Disc	Plain				247				247	
	Disc thickness/min. thickness						9/7				9/7	
	Ø mm	Drum/max. thickness Width		203/205/38					203/205/38			203/205/ 38
	Make			DON			GALFER		DON		DON (***)	DON
	Brake lining grade			8259			G 4554		8259		8259(***)	8259

With ABS REF: Braking compensator integral to the wheel cylinder on vehicles **with ABS REF** all engine-types. The main brake compensator and limiter functions are assured by the **ABS REF** system.
(***) = RPO ➔9898. ➔9898 = GALFER/ G 4554. **(*) = STT =** Stop and start. **(**) =** With emergency braking system (AFU).

BRAKE SPECIFICATIONS

C3

Braking circuit without ABS - REF (drum brakes at the rear)

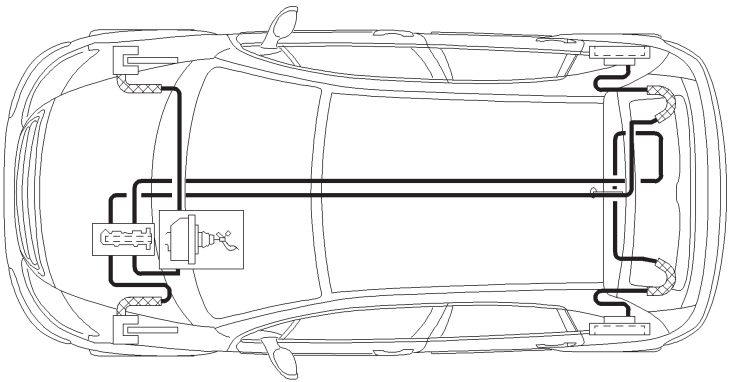

B3FP161D

Braking system specifications

- Braking circuit at «**X**».

- Front brakes with ventilated discs **(*)**.

- Rear brakes with eitther drums or discs **(*)**.

- Handbrake lever controlling cables acting on the rear wheels.

The compensator and main brake limiter functions are assured by the **ABS EBD** system.

NOTE: REF = Electronic Brakeforce Distribution.

(*) = according to version.

C3	BRAKE SPECIFICATIONS

Braking circuit with ABS - REF (drum brakes at the rear)

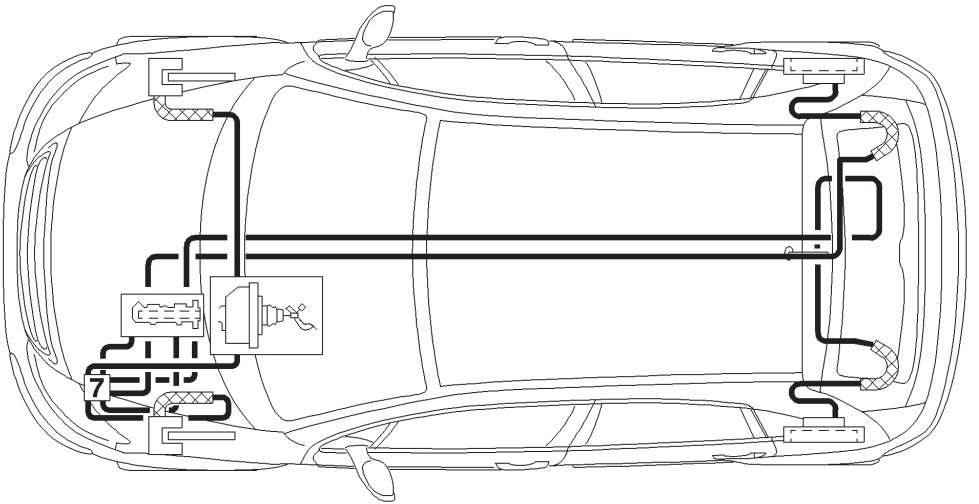

B3FP162D

BRAKE SPECIFICATIONS

C3

Braking circuit with ABS - REF (disc brakes at the rear)

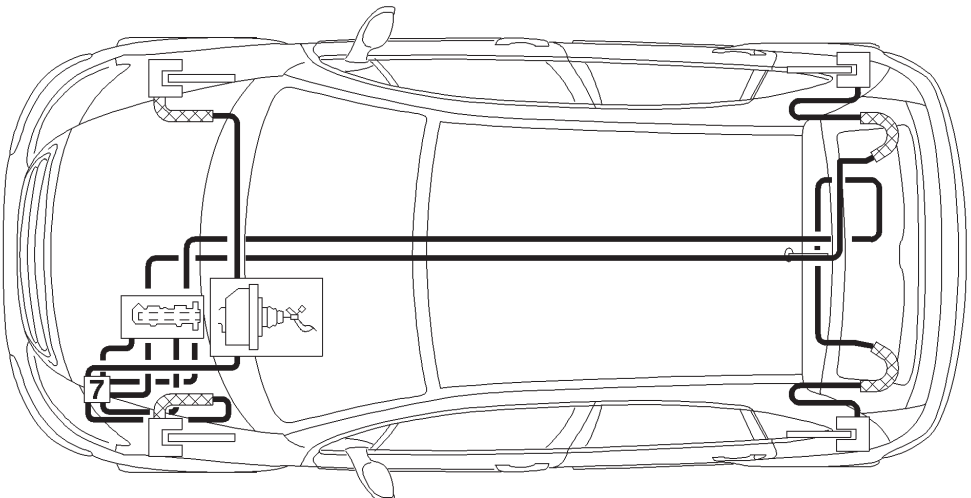

B3FP163D

C3 PLURIEL				BRAKE SPECIFICATIONS (WITH AND WITHOUT ABS REF)						
				Without ABS REF			With ABS REF			
				TU3JP	DV4TD		TU3JP	TU5JP4	DV4TD	
Engines				KFV	8HX	8HZ	KFV	NFU	8HX	8HZ
FT	Ø mm	Master cylinder		20,6			22,2 (***)			
		Master vac		203,2			228,6			
		Caliper makes/pistons		LUCAS/TRW C 54/22/54						
		Disc	Ventilated	266						
	Disc thickness/minimum thickness			22/20						
	Brake pad supplier/grade			TEXTAR T 4144						
RR	Ø mm	Cylinder or caliper		LUCAS/TRW C38 HR 9/13/38				LUCAS/TRWC 38 HR 9/13/38	LUCAS/TRWC 38 HR 9/13/38	
		Disc	Plain					247		
	Disc thickness/minimum thickness							9/7		
	Ø mm	Drum/max. thickness Width		203/205/38					203/205/38	
	Make			DON				GALFER	DON	
	Brake lining grade			8259/1				G 4554	8259/1	

Without ABS REF: Braking compensators on vehicles without **ABS REF.** **(*)** engines TU3JP DV4TD CICR. **(**)** Cut-off pressure (bar) 27. **(*) REF =** Electronic brakeforce distribution **(**) CICR =** Compensator integral to the wheel cylinder.
With ABS REF: Vehicles with **ABS REF** all engine-types. The main brake compensator and limiter functions are assured by the **ABS REF** system.. **(***) =** With emergency braking system (AFU).

BRAKE SPECIFICATIONS

C3 PLURIEL

Braking circuit without ABS - REF (drum brakes at the rear)

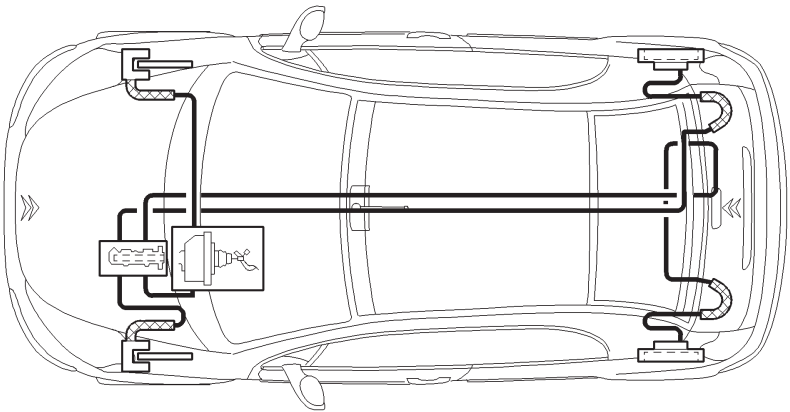

B3FP7BSD

Braking system specifications

- Braking circuit at «**X**».

- Front brakes with ventilated discs **(*)**.

- Rear brakes with eitther drums or discs **(*)**.

- Handbrake lever controlling cables acting on the rear wheels.

The compensator and main brake limiter functions are assured by the **ABS EBD** system.

NOTE: REF = Electronic Brakeforce Distribution.

(*) = according to version.

C3 PLURIEL	BRAKE SPECIFICATIONS

Braking circuit with ABS - REF (drum brakes at the rear)

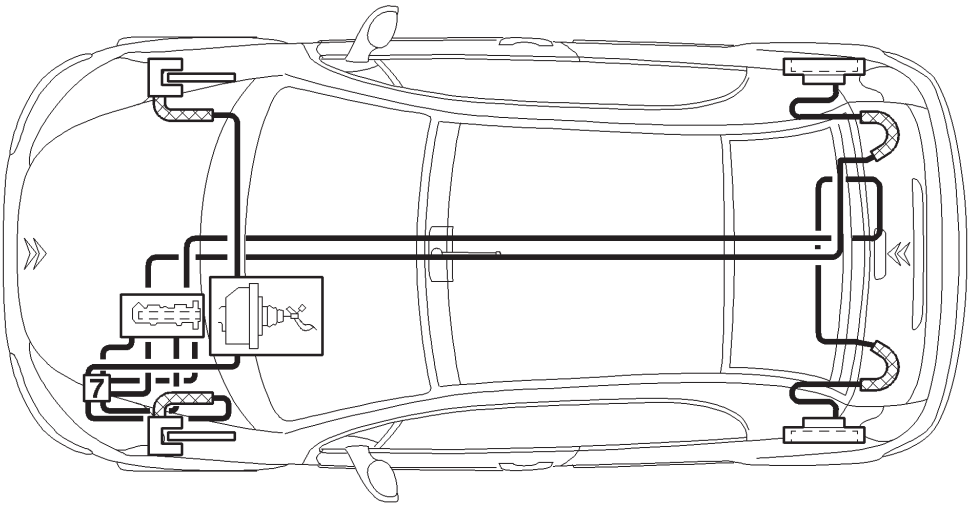

B3FP7BTD

BRAKE SPECIFICATIONS

C3 PLURIEL

Braking circuit with ABS - REF (disc brakes at the rear)

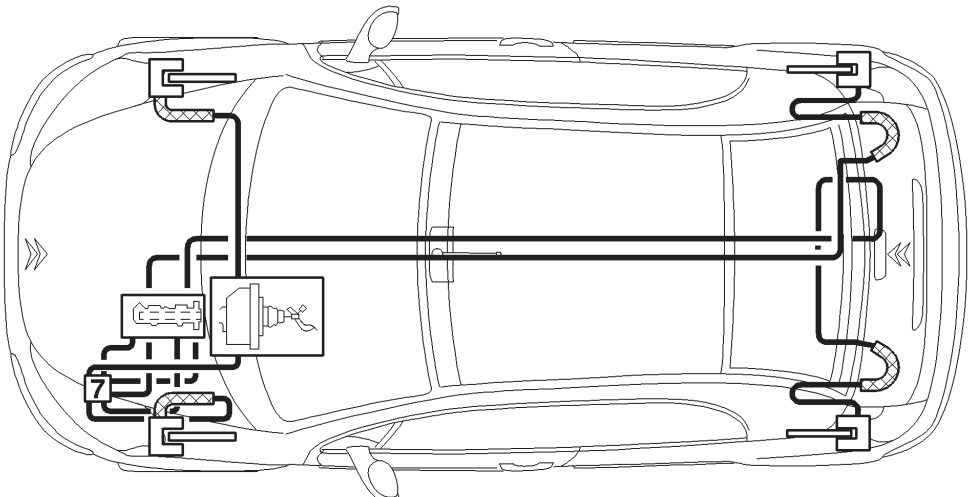

B3FPBUD

C3 - C3 PLURIEL	BRAKE SPECIFICATIONS	
Brake pedal gear	**Front brakes**	**Rear brakes**

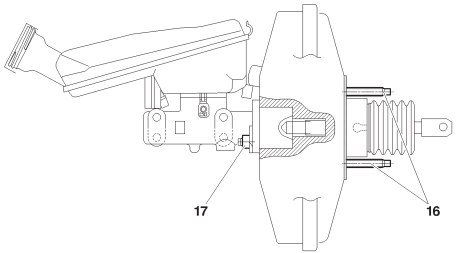

B3FP166D

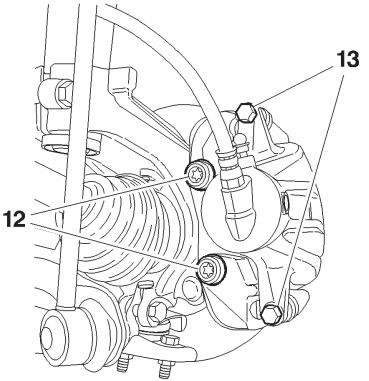

B3FP164C

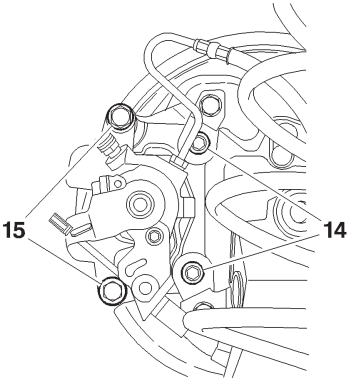

B3FP165C

Tightening torques (m.daN).

(16) Servo fixing	**: 2,2 ± 0,3**	**(12)** Yoke fixing on caliper	**: 10,5 ± 1**	**(14)** Rear caliper fixing on arm	**: 5,3 ± 0,5**
(17) Fixing on master cylinder	**: 2 ± 0,5**	**(13)** Yoke fixing on caliper	**: 3 ± 0,3**	**(15)** Yoke fixing on caliper	**: 3,8 ± 0,3**

HANDBRAKE (adjustment)

C3 - C3 PLURIEL

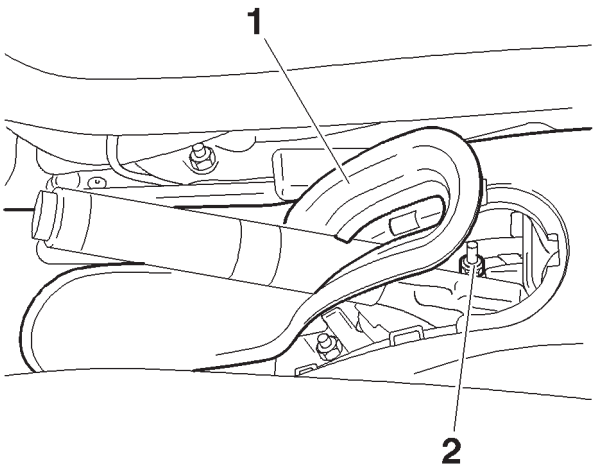

B3FP79XC

Adjustment.

Lift and chock the vehicle.

Remove the access cover **(1)**.

(2) Nut for adjusting the tension of the handbrake cables

WARNING: Check that the brake cables are correctly routed under the vehicle.

Slacken the handbrake lever.

Press gently on the brake pedal *(then repeat the operation **3 times**).*

Pull vigorously on the handbrake lever **4** or **5 times**.

C3 - C3 PLURIEL

HANDBRAKE (adjustment)

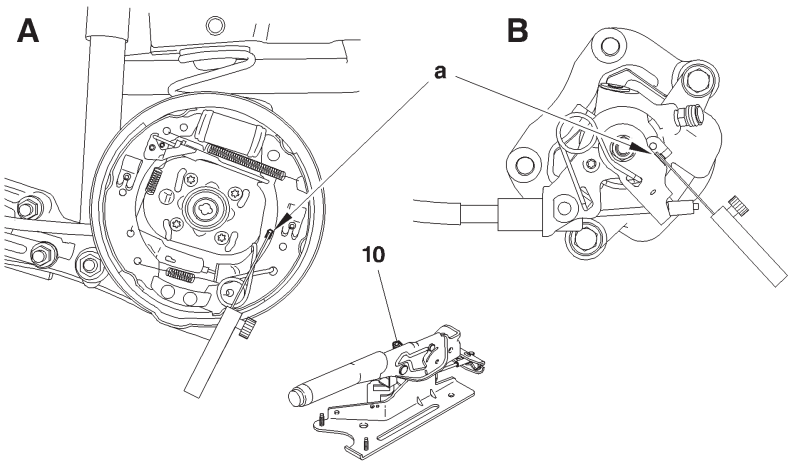

B3FP79YD

Adjustment (continued).

A: Drum brakes
B: Disc brakes
(2) Nut for adjusting cable tensions.
Remove:
- The rear wheels.
- The drums *(according to version)*.

Release the handbrake lever.
Use a gauge set to measure at **«a»** the travel of the lever from its stop.
Adjust the nut **(2)** to obtain a travel of less than or equal to **1 mm** at **«a»**.
Refit the brake drums without tightening them *(according to version)*.
Action the handbrake lever **8 times** with an effort of **40 m.daN**.
With the handbrake released, check the travel of the lever at **«a»**, using a gauge set.
NOTE: The travel should be less than **1 mm** and more than **0,05 mm**.
Refit:
- The brake drums.
- The wheels.
- The access cover **(1)**.

Check the operation of the handbrake.

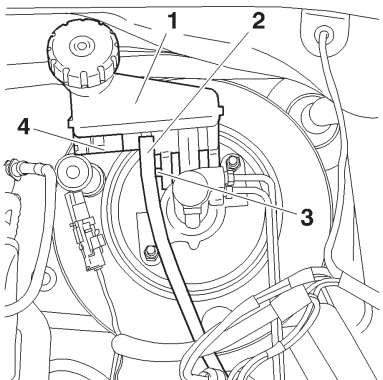

B3FP15XC

Tools.

[1] Generic bleeding apparatus **: «LURO» or similar**

Bleeding, refilling.

Draining.

Drain the brake fluid reservoir **(1)** to the maximum *(if necessary, use a clean syringe)*.
Disconnect the connector **(4)**.
Uncouple the pipe **(2)**.
Unscrew the shaft **(3)**.
Remove the reservoir **(1)**.
- Empty the brake fluid reservoir **(1)**.
- Clean the brake fluid reservoir **(1)**.

Refit:
- The brake fluid reservoir **(1)**.
- The shaft **(3)**.
- Couple the pipe **(2)**.
- Reconnect the connector **(4)**.

Filling the braking system.

WARNING: Use only those hydraulic fluids that are approved and recommended.
- Fill the brake fluid reservoir **(1)**.

Bleeding the braking system.

WARNING: During the bleeding operation, take care to maintain the level of brake fluid in the reservoir and to top it up, using only brake fluid that is clean and clear.

BLEEDING AND FILLING THE BRAKING SYSTEM (continued)

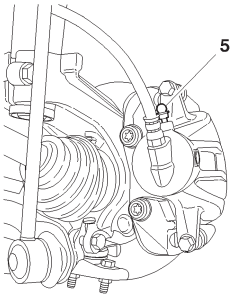

B3FP15YC

Bleeding, filling (continued).

Bleeding the primary braking circuit.

WARNING: The ABS should not be active during the bleeding operation.

- Front brake caliper: Bleed screw **(5)**.
A: Rear brake caliper
B: Rear brake drum

Bleed screw **(6)**.

Bleed each wheel cylinder, proceeding in the following order:

- Front LH wheel.
- Front RH wheel.
- Rear LH wheel.
- Rear RH wheel.

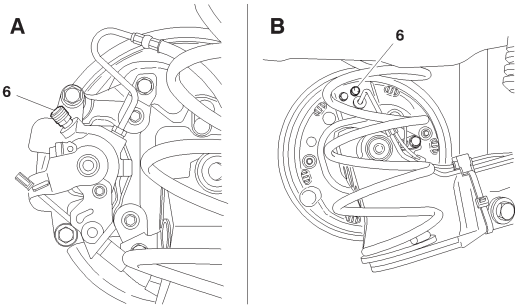

B3FP15ZD

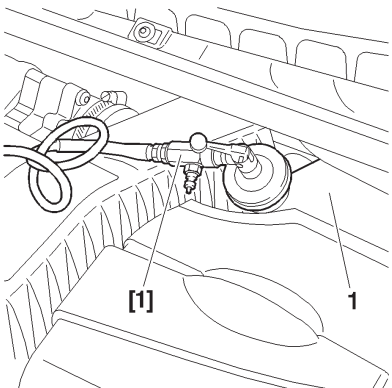

B3FP160C

Bleeding, filling (continued).

With the bleeding apparatus.

Connect the bleeding apparatus **[1]** on the brake fluid reservoir **(1)**.
Adjust the apparatus pressure to **2 bars**.
For each circuit:
- Connect a transparent tube onto the bleed screw, submerge the other end of the tube in a clean container.
- Open the bleed screw, wait until the fluid is flowing out without air bubbles.
- Close the bleed screw.
- Remove the bleeding apparatus **[1]**.
- Check the brake fluid level *(should be between «**MINI**» level and «**MAXI**» level)*.
- Fill if necessary with the approved and recommended synthetic brake fluid.

Without the bleeding apparatus.

NOTE: Two operators are necessary.
For each circuit:
- Apply the brake pedal to place the circuit under pressure.
- Connect a transparent tube onto the bleed screw, submerge the other end of the tube in a clean container.
- Open the bleed screw, wait until the fluid is flowing out without air bubbles.
- Close the bleed screw.
- Remove the tool **[1]**.

NOTE: Recommence the process a **second time** if that is necessary.

- Check the brake fluid level *(should be between «**MINI**» level and «**MAXI**» level)*.
- Fill if necessary with the approved and recommended synthetic brake fluid.

AIR CONDITIONING R 134.a (HFC)

Vehicle	Engines	Date	Refrigerant refill	Compressor		
				Variable Capacity	Oil quantity cc	Oil reference
C2	All types EUROPE	07/04 →	500 ± 25 gr	SD 6 V 12	135	SP 10
	All types MERCOSUR		600 ± 25 gr			
C3 C3 Pluriel	All types EUROPE		500 ± 25 gr			
	All types MERCOSUR		600 ± 25 gr			

«EUROCLIM»

Tools.

Tool for removing-refitting air conditioning seals **: FACOM (-).1702**

IMPERATIVE: Removing-refitting the MANULLI seal:
see corresponding operation.

MANULLI seal

C2 C3 : All engine-versions.

Compressor (MANULLI seal)

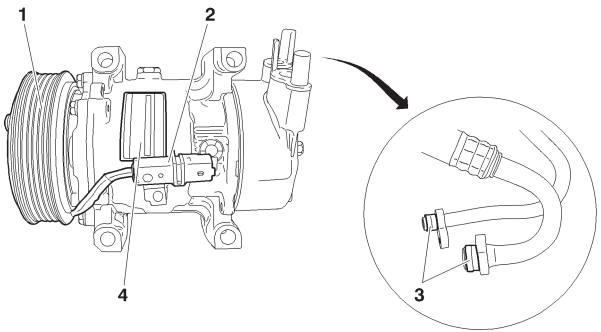

C5HP18UD

The drive plate **(1)** is held on the aircon compressor shaft by ribs.
New wiring **(2)**.
New seals **(3) (MANULLI)**.
Identification label **(4)** for aircon compressor.

Pollen filter

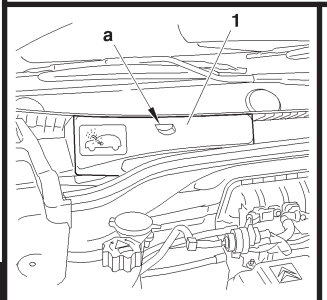

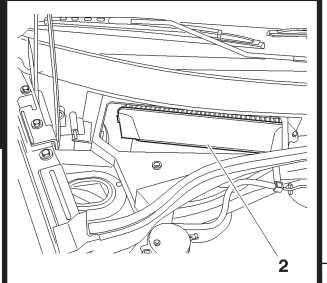

Note: The pollen filter is located in the engine compartment on the RH side.

Removing.

To remove:
- Pull on the tab of the plastic cover **(1)** at **«a»**.

- Tilt the flap **(2)**.

Remove the pollen filter **(3)**.

Refitting.

Proceed in reverse order.

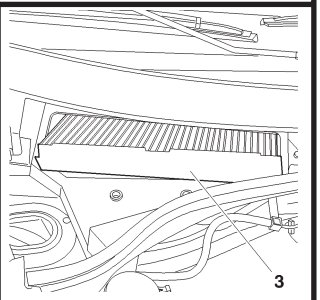

C4AP1BRC C4AP1BSC C4AP1BTC

Pollen filter

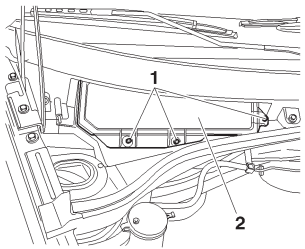

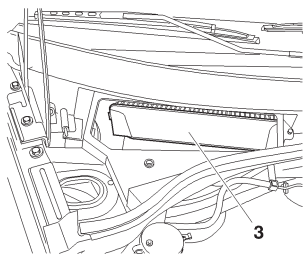

Note: The pollen filter is located in the engine compartment on the RH side.

Removing.

Remove:
- The three screws **(1)**.
- The plastic cover **(2)**.

Tilt the flap **(3)**.

Remove the pollen filter **(4)**.

Refitting.

Proceed in reverse order.

C4AP169C | C4AP16AC | C4AP16BC

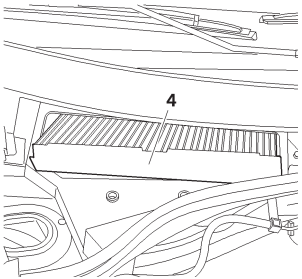

Changing the filtering/drying cartridge

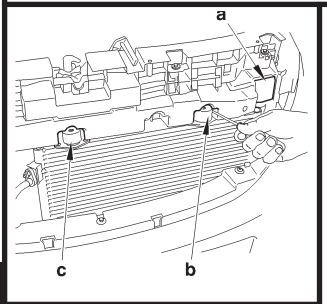

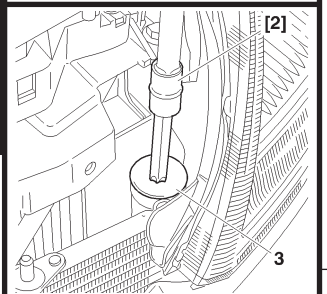

Tools.

[1] Charge station	**: *(according to workshop equipment)***	
[2] TORX adaptor	**: TORX 70 FACOM**	
[3] Inertia extractor	**: 1671-T.**	**Toolkit 4114-T**
[4] Endpiece **Ø 20**	**: 1671-T.D20**	
[5] Set of plugs	**: (-).0188.T**	
[6] Circlip pliers	**: FACOM**	

Removing.

Depressurise the aircon circuit, using tool **[1]**.
Remove the grille.
At **«a»**, remove the pin and the plastic cover.
Unclip the condenser at **«b»** and **«c»**, using a screwdriver.
Tilt the condenser towards the front.
Lift and release the condenser.
Clean the area around the cap **(3)**.
Remove the plastic cap **(3)**, using tool **[2]**.
Remove the safety circlip **(4)**, using tool **[6]**.
Position the tool **[3]** and **[4]** in the aperture of the cartridge **(5)**.
Extract the cartridge from the reservoir **(6)**, using tool **[3]** and **[4]**.
Block the reservoir **(6)**, using tool **[5]**.

C4AP163C | C4AP164C

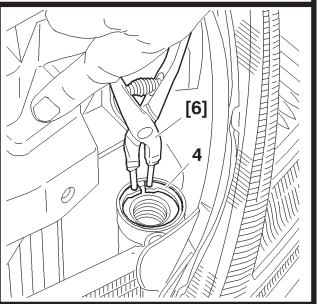

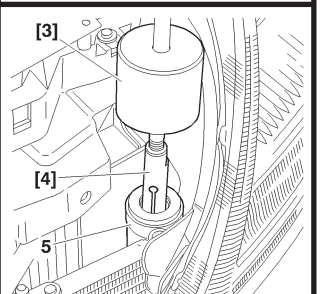

C4AP165C | C4AP166C

Changing the filtering/drying cartridge

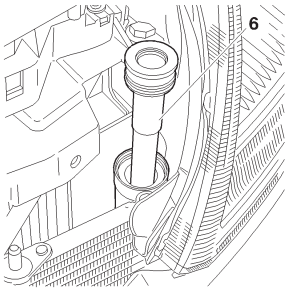

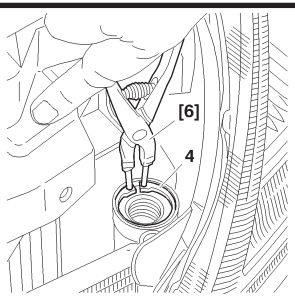

Refitting.
Remove the new cartridge from its packaging.
Do not expose the cartridge, the filter and seals to pollutants.
Lightly oil the seals *(compressor oil)*.
Remove tool **[5]** from the reservoir **(6)**.
Insert the new cartridge **(5)** into the reservoir **(6)**.
Refit the safety circlip **(4)**, using tool **[6]**.
Make sure that the circlip **(4)** is correctly positioned in its location.

WARNING: Not more than 5 minutes should elapse between the removal of the cartridge (6) from its packaging and its being fitted.

Refit:
- The plastic cap **(3)**, using tool **[5]** - Tighten to **1,2 ± 0,1 m.daN**.
- The condenser *(reclip, pushing at «**b**» and «**c**»)*.
- The plastic cover and the pins at **«a»**.
- The grille **(2)**.
- The screws **(1)**.

Proceed to:
- Recharge the circuit *(see corresponding operation)*.
- Check the operation of the air conditioning *(see corresponding operation)*.

C4AP167C | C4AP165C

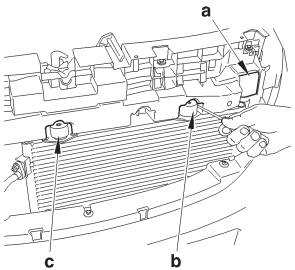

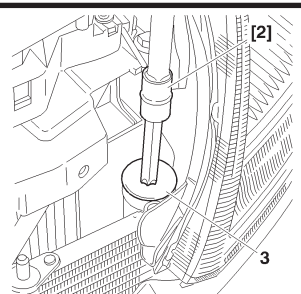

C4AP163C | C4AP164C

SPECIAL FEATURES: AIR CONDITIONING SYSTEM (R 134.a)

Compressor lubricant

ESSENTIAL: The compressor lubricant is extremely hygroscopic; always use FRESH oil.

Checking the compressor oil level

There are three specific cases:
- 1/ Repairs to a system without leaks.
- 2/ Slow leak.
- 3/ Fast leak.

1/ Repairing a system without leaks.
a) - Using draining/recovery equipment not fitted with an oil decanter.
- Drain the system as slowly as possible via the **LOW PRESSURE** valve, so as not to lose any oil.
- No more oil should be added when filling the system with **R 134.a** fluid.

b) - Using draining/filling equipment fitted with an oil decanter.
- Drain the **R 134.a** fluid from the system in accordance with the instructions in the equipment handbook.
- Measure the amount of oil recovered.
- Add the same amount of **NEW oil** when filling the system with **R 134.a** fluid.

c) - Replacing a compressor.
- Remove the old compressor, drain it and measure the oil quantity.
- Drain the new compressor *(supplied full)*, so that the same amount of **NEW oil** is left in the compressor as was in the old compressor.
- No more oil should be added when filling the system with **R 134.a** fluid.

Checking the compressor oil level (continued)

2/ Slow leak.

- Slow leaks do not lead to oil loss, therefore the same procedure should be followed as if there was no leak at all.

3/ Fast leak.

This type of leak causes both oil loss as well as allowing air to enter the system.

It is therefore necessary to:
- Replace the dehydrator.
- Drain as much oil as possible *(when replacing the faulty component)*.

Either before or during filling of the system with **R 134.a** fluid, introduce **80 cc of NEW oil** into the system.

Having changed any of the following components, the quantities to be added are:

- A drying bottle	: **15 cc** of compressor oil.
- A condensor or an evaporator	: **20 cc** of compressor oil.
- A high pressure or low pressure pipe	: **5 cc** of compressor oil.
- A drying cartridge	: **15 cc** of compressor oil.

CHECKING THE EFFICIENCY OF THE AIR CONDITIONING SYSTEM

Tool EXXOTest

Tool *(flash équipement & matériel).*

Exxoclim **: 2.4.2-1**

Mode d'emploi **: Voir notice constructeur**

E5AP2N5D

Tool VALEO

Tool.

Clim test 2 **: 4372-T**

E5AP2N4D

Checks.

Position the tool CLIM TEST II *(depending on manufacturer's instructions).*

Preliminary operations.

Close all the front air vents.
Start the engine.
Open the front LH air vent.
Position the air distribution control to frontal flow .
Activate the air recirculation control.
Activate the air conditioning control.

Positions of the air conditioning controls:

- Temperature control on maximum cold
- Blower control in maximum speed position.

Let the air conditioning operate for **5 minutes**.

CHECKING THE EFFICIENCY OF THE AIR CONDITIONING SYSTEM

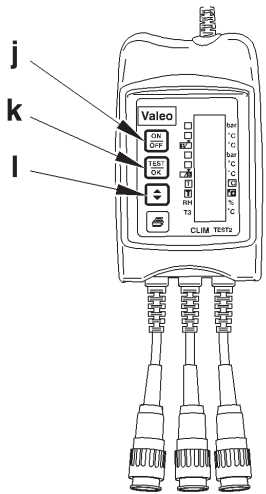

E5AP2FAC

Setting the checking tool [1] to measurement mode.
Operate the checking tool, press on button **"j"**.
Select the type of aircon fluid: R134.a or R12:
- Press on button **"l"**, validate by pressing on button **"k"**.
Select the type of aircon fluid: with filtering and drying cartridge, or calibrated aperture:
- Press on button **"l"**, validate by pressing on button **"k"**.
Select the temperature setting T3:
- Press on button **"l"**, validate by pressing on button **"j"**.

NOTE: The tool is in measurement mode.

Aircon compressor with fixed capacity:
- Take the measurement with the engine running at idle.
Aircon compressor with variable capacity:
- Take the measurement with the engine running at **1500 rpm**.

Setting the checking tool to diagnostic mode.
Set the checking tool to diagnostic mode, press on button **"j"**.
The diagnosis is performed instantaneously: values outside the tolerances are displayed on a dark background.

CHECKING THE EFFICIENCY OF THE AIR CONDITIONING SYSTEM

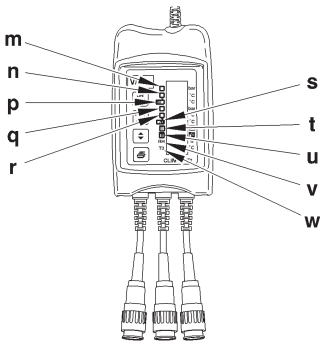

E5AP2FBC

Interpretation of the measurements.

«m» : High pressure.
«n» : High temperature.
«p» : Under-cooling (SR).
«q» : Low pressure.
«r» : Low temperature.
«s» : Over-heating (SC).
«t» : Ambient air temperature.
«u» : Blown air temperature.
«v» : Humidity.
«w» : Temperature T3.

Under-cooling.

The under-cooling represents the difference between the condensation temperature and the aircon fluid temperature at the aircon condenser outlet.
The under-cooling gives the quantity of aircon fluid *(in the liquid state)* in the air conditioning circuit.

Values for under-cooling (SR).

Values «p»	Origins	Solutions
SR < 2°C	Lack of aircon fluid in the aircon condenser *(should be more than **150 grammes**)*	Add aircon fluid
2°C < SR <4°C	Lack of aircon fluid in the aircon condenser *(should be around **100** to **150 grammes**)*	
4°C < SR < 10°C/12°C	Correct quantity	
SR > 10°C/12°C	Excess aircon fluid in the aircon condenser	Remove aircon fluid
SR > 15°C		

Blown air temperature «u».

The blown air temperature should be between **2°C** and **10°C**.

CHECKING THE EFFICIENCY OF THE AIR CONDITIONING SYSTEM

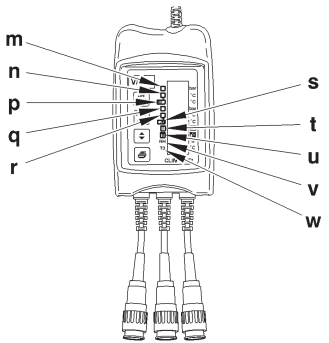

E5AP2FBC

Interpretation of the measurements.

«**m**» **:** High pressure.
«**n**» **:** High temperature.
«**p**» **:** Under-cooling (SR).
«**q**» **:** Low pressure.
«**r**» **:** Low temperature.
«**s**» **:** Over-heating (SC).
«**t**» **:** Ambient air temperature.
«**u**» **:** Blown air temperature.
«**v**» **:** Humidity.
«**w**» **:** Temperature T3.

Over-heating (SC).

The over-heating represents the difference between the aircon fluid temperature at the evaporator outlet and the evaporation temperature.
The over-heating gives the quantity of aircon fluid *(in the liquid state)* in the air conditioning circuit.

Values for over-heating (SC).

Values «s»	Origins	Solutions
2° < SC < 15°C	Correct quantity	
SC > 15°C	Lack of aircon fluid in the cooling circuit	Add aircon fluid
SC < 2°C	Excess aircon fluid in the cooling circuit	Remove aircon fluid

Blown air temperature «u».

The blown air temperature should be between **2°C** and **10°C**.

CHECKING THE EFFICIENCY OF THE AIR CONDITIONING SYSTEM

Interpretation of the diagnosis

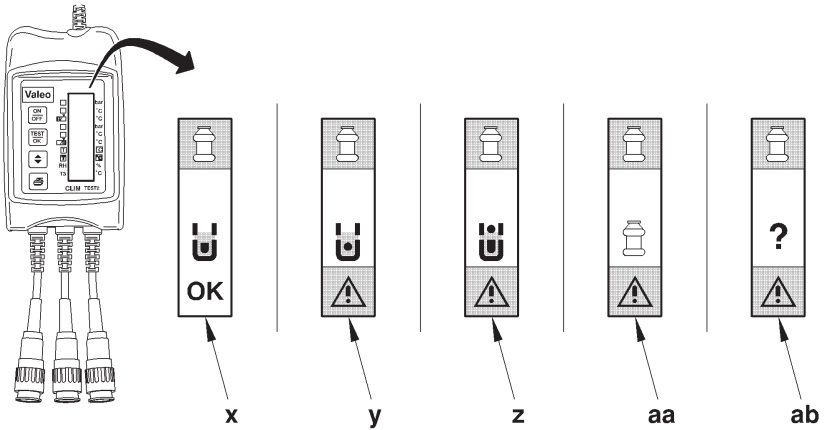

E5AP2FCD

«**x**» Check satisfactory
«**y**» Lack of aircon fluid in the aircon circuit
«**z**» Excess aircon fluid in the aircon circuit
«**aa**» Filtering and drying cartridge clogged
«**ab**» Other problems *(see table above)*

CHECKING THE EFFICIENCY OF THE AIR CONDITIONING SYSTEM

Aircon circuit diagnosis table

Principal problem	Symptom	Possible causes
The aircon compressor does not turn or stops suddenly	The clutch of the aircon compressor does not engage, or disengages suddenly	Aircon compressor clutch
		Lack of aircon fluid in the aircon circuit
		Aircon pressostat
		Aircon evaporator sensor
		Electrical circuit *(wiring, fuses, etc.)*
	The clutch of the aircon compressor remains engaged and stops suddenly	Auxiliaries drive belt
		Aircon compressor
		Filtering and drying cartridge
		Aircon pressure reducer
		Leak of aircon fluid
		Aircon compressor clutch

CHECKING THE EFFICIENCY OF THE AIR CONDITIONING SYSTEM

Aircon circuit diagnosis table

Principal problem	Symptom	Possible causes
The aircon compressor makes an abnormal noise	The clutch of the aircon compressor remains engaged	Incorrect adjustment of the aircon compressor clutch
		Aircon fluid quantity
		Aircon compressor defective
		Lack of aircon fluid in the aircon circuit
		Aircon compressor valves defective
	The clutch of the aircon compressor remains engaged and slips	Aircon compressor clutch
		Auxiliaries drive belt

CHECKING THE EFFICIENCY OF THE AIR CONDITIONING SYSTEM

Aircon circuit diagnosis table

Principal problem	Symptom	Possible causes
Abnormal levels of pressure	Low pressure and high pressure too high	Aircon pressure reducer defective
		Duct clogged
	Low pressure too high and high pressure too low	Aircon compressor seal defective
	Low pressure too low and high pressure too high	Aircon evaporator sensor defective
		Aircon pressure reducer jammed
		Filtering and drying cartridge obstructed
		Duct clogged
	Low pressure and high pressure too low	Duct clogged
		Aircon pressure reducer jammed
		Lack of aircon fluid in the aircon circuit
		Aircon compressor defective

CHECKING THE EFFICIENCY OF THE AIR CONDITIONING SYSTEM

Aircon circuit diagnosis table

Principal problem	Symptom	Possible causes
Abnormal levels of pressure	Low pressure normal and high pressure too high	Presence of air in the aircon circuit
	Low pressure normal and high pression too low	Aircon pressostat defective
		Evaporator sensor defective
	Low pressure too high and high pressure normal	Aircon pressure reducer jammed open
	Low pressure too low and high pressure normal	Filtering and drying cartridge saturated or clogged
		Aircon pressure reducer iced up
Air conditioning operating in back-up mode	Under-cooling too weak	Lack of aircon fluid
	Under-cooling excessive	Excess aircon fluid
		Presence of air in the aircon circuit
		Filtering and drying cartridge clogged

NOTE: In all cases, measure the excessive heating **(SC)** and the blown air temperature.

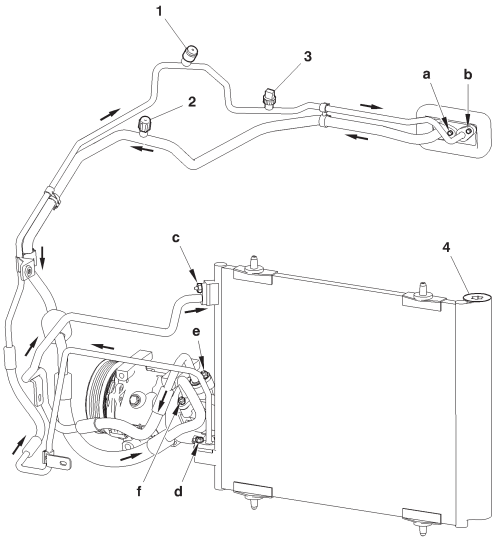

C5HP19UP

(1) High pressure valve

(2) Low pressure valve

(3) Pressostat

(4) Filter

Tightening torques (m.daN).

(a)	**: 0,6**
(b)	**: 0,6**
(c)	**: 0,6**
(d)	**: 0,6**
(e)	**: 0,6**
(f)	**: 0,7**

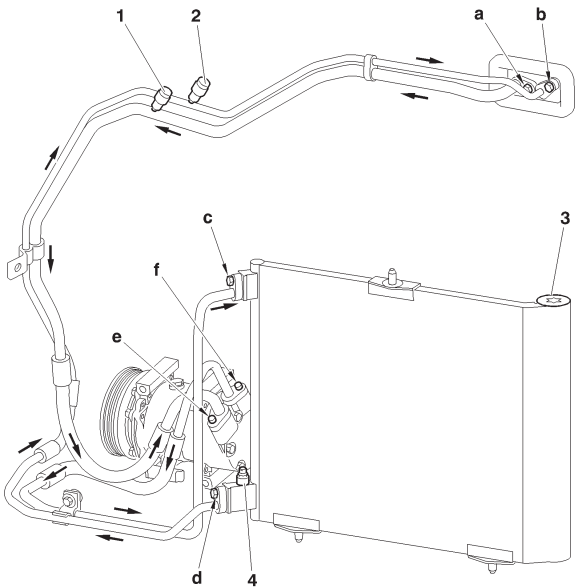

C5HP17SP

(1) Low pressure valve

(2) High pressure valve

(3) Filter

(4) Pressostat

Tightening torques (m.daN).

(a)	**: 0,6**
(b)	**: 0,6**
(c)	**: 0,6**
(d)	**: 0,6**
(e)	**: 0,6**
(f)	**: 0,6**